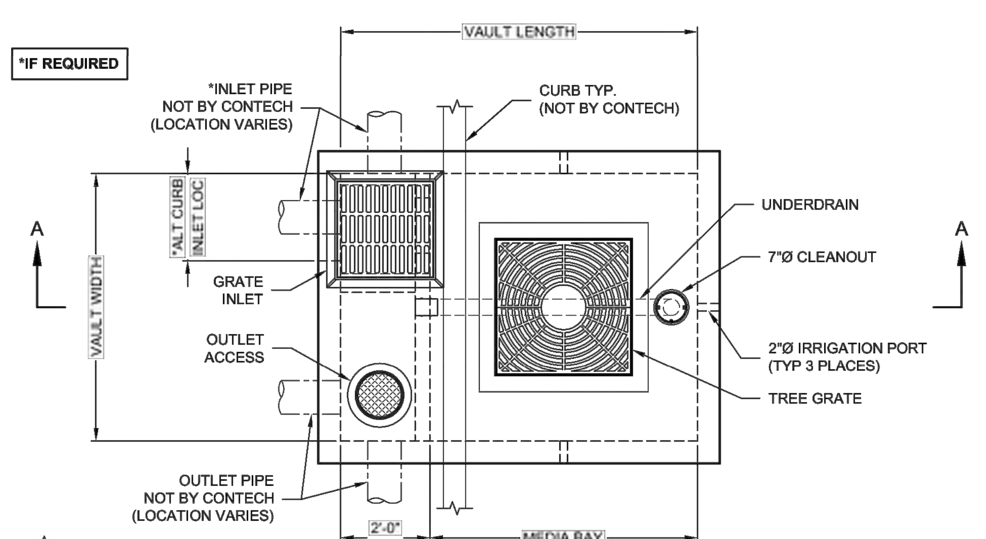

PLAN VIEW

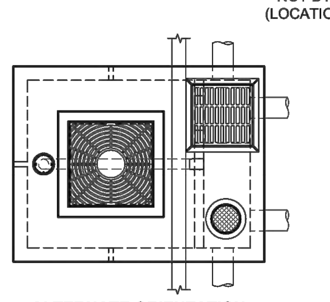

ALTERNATE ORIENTATION

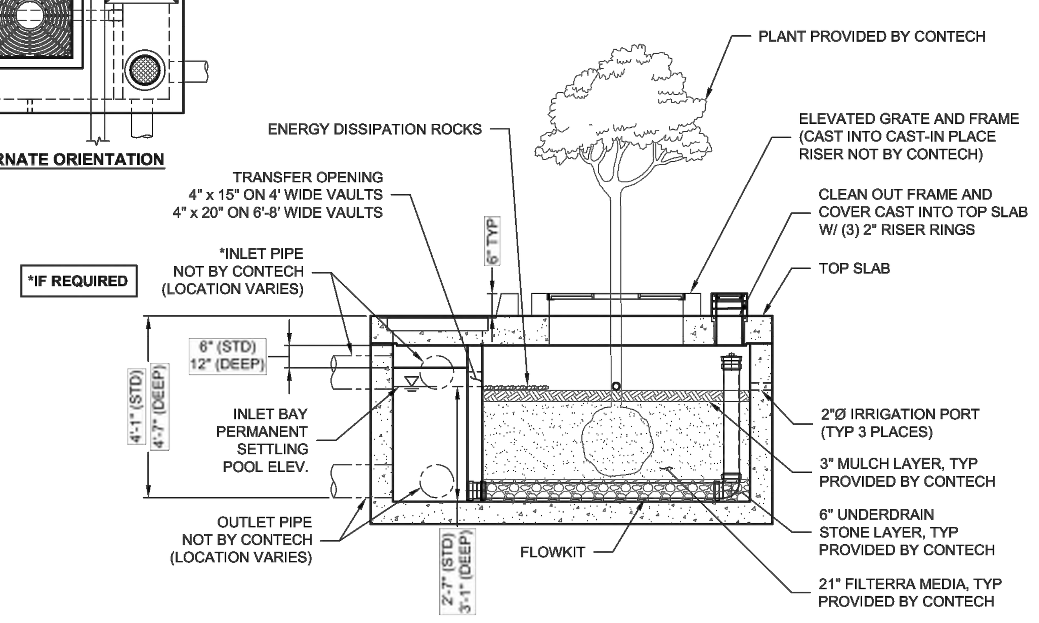

SECTION A-A
(STANDARD DEPTH SHOWN)

FTPD-G STANDARD HEIGHT CONFIGURATION

DESIGNATION (OPTIONS: -P)	AVAILABILITY	MEDIA BAY SIZE	VAULT SIZE (W x L)	WEIR LENGTH/ MAX CURB OPENING	*MAX BYPASS FLOW (CFS)	GRATE INLET/ OUTLET ACCESS SIZE	TREE GRATE QTY & SIZE
FTPD0404-G	N/A CA	4 x 4	4 x 6	1'-8"	1.4	12"SQ/12"Ø	(1) 2.5' x 2.5'
FTPD04045-G	CA ONLY	4 x 4.5	4 x 6.5	1'-8"	1.4	12"SQ/12"Ø	(1) 2.5' x 2.5'
FTPD0406-G	N/A MID-ATL	4 x 6	4 x 8	1'-8"	1.4	12"SQ/12"Ø	(1) 3' x 3'
FTPD045058-G	MID-ATL ONLY	4.5 x 5.83	4.5 x 7.83	1'-8"	1.4	12"SQ/12"Ø	(1) 3' x 3'
FTPD0604-G	ALL	6 x 4	6 x 6	1'-8"	1.4	24"SQ/12"Ø	(1) 2.5' x 2.5'
FTPD0606-G	ALL	6 x 6	6 x 8	1'-8"	1.4	24"SQ/12"Ø	(1) 3' x 3'
FTPD0608-G	ALL	6 x 8	6 x 10	1'-8"	1.4	24"SQ/12"Ø	(1) 4' x 4'
FTPD0610-G	ALL	6 x 10	6 x 12	1'-8"	1.4	24"SQ/12"Ø	(1) 4' x 4'
FTPD0710-G	ALL	7 x 10	7 x 13	2'-6"	2.1	24"SQ/24"Ø	(1) 4' x 4'
FTPD08105-G	ALL	8 x 10.5	8 x 14	3'-0"	2.5	24"SQ/24"Ø	(1) 4' x 4'
FTPD08125-G	ALL	8 x 12.5	8 x 16	3'-0"	2.5	24"SQ/24"Ø	(2) 4' x 4'

N/A = NOT AVAILABLE

FTPD-GD DEEP OPTION CONFIGURATION

DESIGNATION (OPTIONS: -P)	AVAILABILITY	MEDIA BAY SIZE	VAULT SIZE (W x L)	WEIR LENGTH/ MAX CURB OPENING	*MAX BYPASS FLOW (CFS)	GRATE INLET/ OUTLET ACCESS SIZE	TREE GRATE QTY & SIZE
FTPD0404-GD	N/A CA	4 x 4	4 x 6	1'-8"	4.6	12"SQ/12"Ø	(1) 2.5' x 2.5'
FTPD04045-GD	CA ONLY	4 x 4.5	4 x 6.5	1'-8"	4.6	12"SQ/12"Ø	(1) 2.5' x 2.5'
FTPD0406-GD	N/A MID-ATL	4 x 6	4 x 8	1'-8"	4.6	12"SQ/12"Ø	(1) 3' x 3'
FTPD045058-GD	MID-ATL ONLY	4.5 x 5.83	4.5 x 7.83	1'-8"	4.6	12"SQ/12"Ø	(1) 3' x 3'
FTPD0604-GD	ALL	6 x 4	6 x 6	1'-8"	4.6	24"SQ/12"Ø	(1) 2.5' x 2.5'
FTPD0606-GD	ALL	6 x 6	6 x 8	1'-8"	4.6	24"SQ/12"Ø	(1) 3' x 3'
FTPD0608-GD	ALL	6 x 8	6 x 10	1'-8"	4.6	24"SQ/12"Ø	(1) 4' x 4'
FTPD0610-GD	ALL	6 x 10	6 x 12	1'-8"	4.6	24"SQ/12"Ø	(1) 4' x 4'
FTPD0710-GD	ALL	7 x 10	7 x 13	2'-6"	6.8	24"SQ/24"Ø	(1) 4' x 4'
FTPD08105-GD	ALL	8 x 10.5	8 x 14	3'-0"	8.2	24"SQ/24"Ø	(1) 4' x 4'
FTPD08125-GD	ALL	8 x 12.5	8 x 16	3'-0"	8.2	24"SQ/24"Ø	(2) 4' x 4'

N/A = NOT AVAILABLE

*MAX BYPASS FLOW IS INTERNAL WEIR FLOW . SITE SPECIFIC ANALYSIS IS REQUIRED TO DETERMINE GRATE INLET FLOW CAPACITY

INTERNAL PIPE CONFIGURATION MAY VARY
DEPENDING UPON OUTLET LOCATION.

filterra
THIS PRODUCT MAY BE PROTECTED BY ONE OR MORE OF THE FOLLOWING U.S. PATENTS: 6,277,274; 6,569,321; 7,625,485; 7,425,261; 7,833,412; RELATED FOREIGN PATENTS.

The design and information shown on this drawing is provided as a service to the project owner, engineer and contractor by Contech Engineered Solutions LLC or one of its affiliated companies ("Contech"). Neither this drawing, nor any part thereof, may be used, reproduced or modified in any manner without the prior written consent of Contech. Failure to comply is done at the user's own risk and Contech expressly disclaims any liability or responsibility for such use. If discrepancies between the supplied information upon which the drawing is based and actual field conditions are encountered as site work progresses, these discrepancies must be reported to Contech immediately for re-evaluation of the design. Contech accepts no liability for designs based on missing, incomplete or inaccurate information supplied by others.

CONTECH ENGINEERED SOLUTIONS LLC
www.ContechES.com
9025 Centre Pointe Dr., Suite 400, West Chester, OH 45069
800-338-1122 513-645-7000 513-645-7993 FAX

FILTERRA PEAK DIVERSION - GRATE (FTPD-G) CONFIGURATION DETAIL

PENNONI ASSOCIATES INC.
5430 Wade Park Boulevard, #106
Raleigh, NC 27607
T 919.929.1173 F 919.493.6548
Firm License F-1267

ALL DIMENSIONS MUST BE VERIFIED BY CONTRACTOR AND OWNER MUST BE NOTIFIED OF ANY DISCREPANCIES BEFORE PROCEEDING WITH WORK

TARHEEL LODGING REDEVELOPMENT PHASE 2
1742 FORDHAM BLVD.
CHAPEL HILL, NC

DRAINAGE DETAILS

TARHEEL LODGING, LLC & UNICORN GROUP FIFTEEN, LLC
6110 FALCON BRIDGE ROAD
CHAPEL HILL, NC 27517

DATE	NO.	REVISIONS	BY
04/28/2023	23	PHASE 2 MODIFICATIONS	DTR

ALL DOCUMENTS PREPARED BY PENNONI ASSOCIATES ARE INSTRUMENTS OF SERVICE IN RESPECT OF THE PROJECT. THEY ARE NOT INTENDED OR REPRESENTED TO BE SUITABLE FOR REUSE BY OWNER OR OTHERS ON THE EXTENSIONS OF THE PROJECT OR ON ANY OTHER PROJECT. ANY REUSE WITHOUT WRITTEN VERIFICATION OR ADAPTATION BY PENNONI ASSOCIATES FOR THE SPECIFIC PURPOSE INTENDED WILL BE AT OWNERS SOLE RISK AND WITHOUT LIABILITY OR LEGAL EXPOSURE TO PENNONI ASSOCIATES; AND OWNER SHALL INDEMNIFY AND HOLD HARMLESS PENNONI ASSOCIATES FROM ALL CLAIMS, DAMAGES, LOSSES AND EXPENSES ARISING OUT OF OR RESULTING THEREFROM.

PROJECT	RKINV18001
DATE	2019/05/21
DRAWING SCALE	AS SHOWN
DRAWN BY	RLM/CSB
APPROVED BY	ESM

CS6022

U:\Accounts\RKINV\RKINV18001 - Hotel Site Chapel Hill\DESIGN_SHEETS\WATER DETAILS.dwg PLOTTED: 6/19/2023 11:38 AM, BY: Jason Thibodeaux PLOTSTYLE: Pennoni NCS.stb PROJECT STATUS: ---

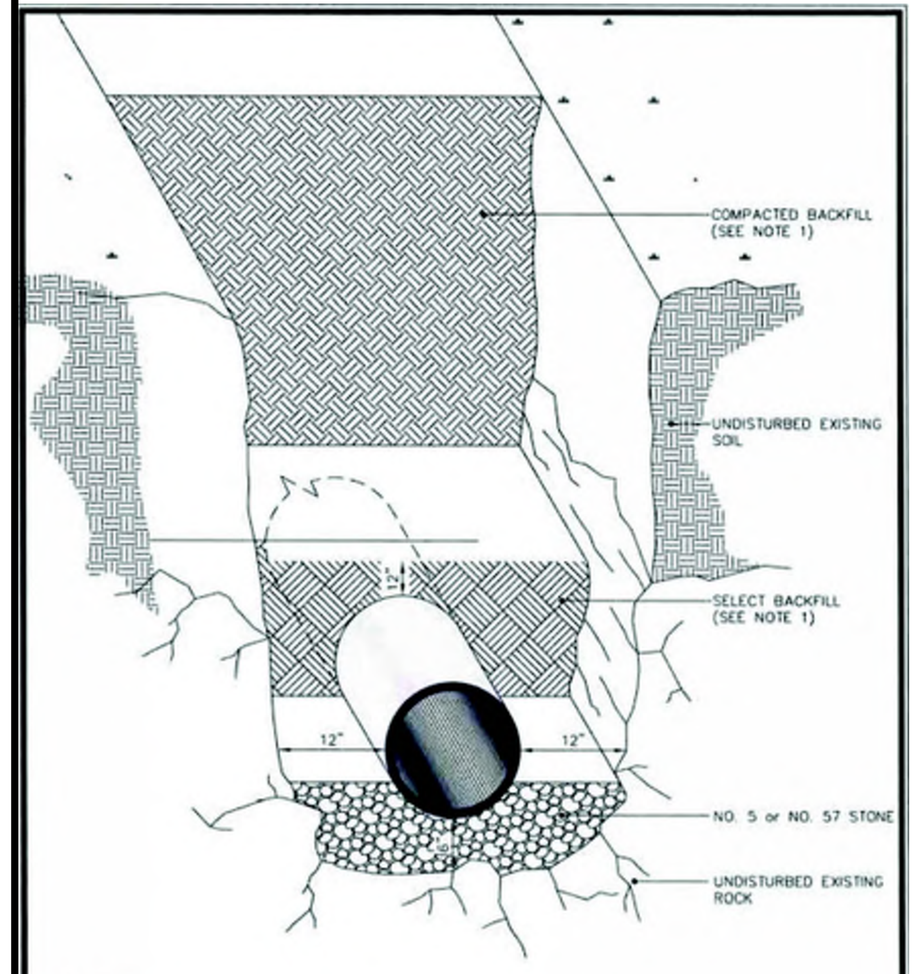

NOTES:
1. See specification section 02275 Trenching, Backfilling, and Compaction of Utilities for backfill and compaction requirements.

OWASA Quality Service Since 1977 — 400 Jones Ferry Road, PO Box 366, Carrboro, NC 27510-0366 — ORANGE WATER AND SEWER AUTHORITY — Voice (919) 968-4421 FAX (919) 968-4464 www.owasa.org — USE WITH THE OWASA STANDARD SPECIFICATIONS ONLY

DETAIL of ROCK EXCAVATION — SCALE: Not To Scale — DETAIL # 511.01 — REVISION DATE: August 15, 2003 — SHEET # 1 of 1

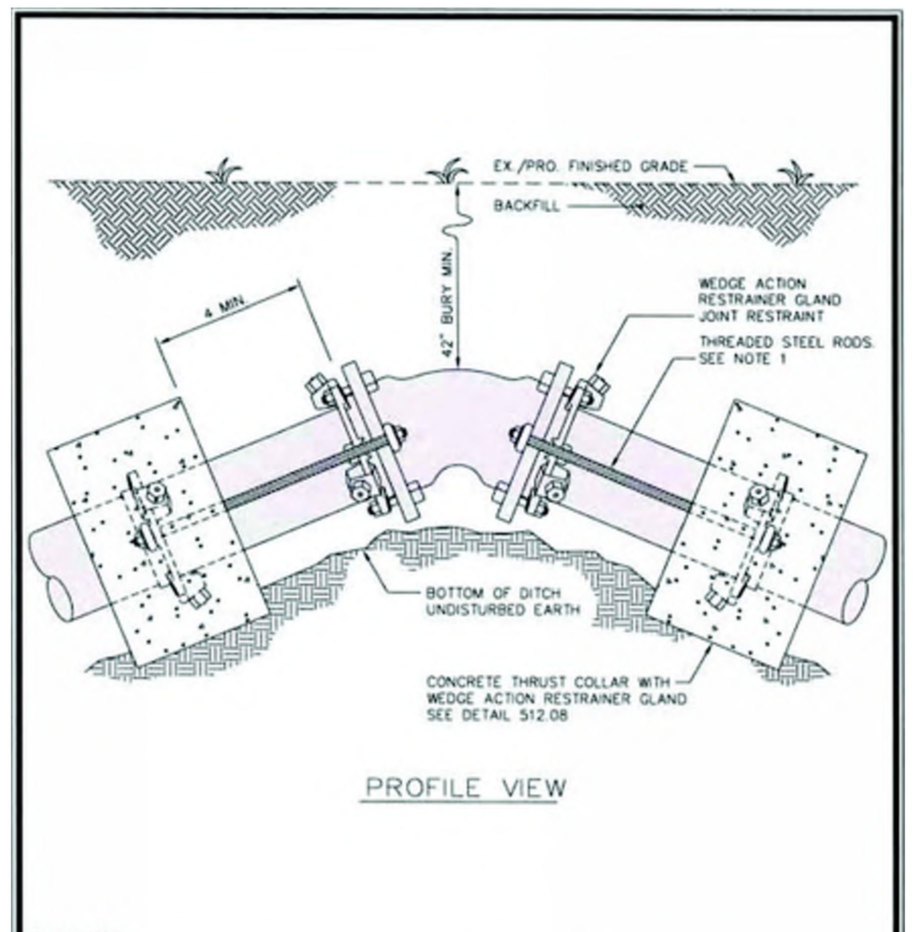

NOTES:
1. If 42" bury depth is not maintained or located in high pressure zone, a minimum of (2) 3/4" dia. rods to be used for pipe thru 24" dia. per joint – a minimum of (2) 1" dia. rods to be used for pipe 30" & 36" dia. per joint – a minimum of (2) 1 1/4" dia. rods to be used for pipe 42" & 48" dia. per joint. (See detail 512.09)

ORANGE WATER AND SEWER AUTHORITY

STANDARD VERTICAL BEND DETAIL — SCALE: Not To Scale — DETAIL # 512.01 — REVISION DATE: August 15, 2003 — SHEET # 1 of 1

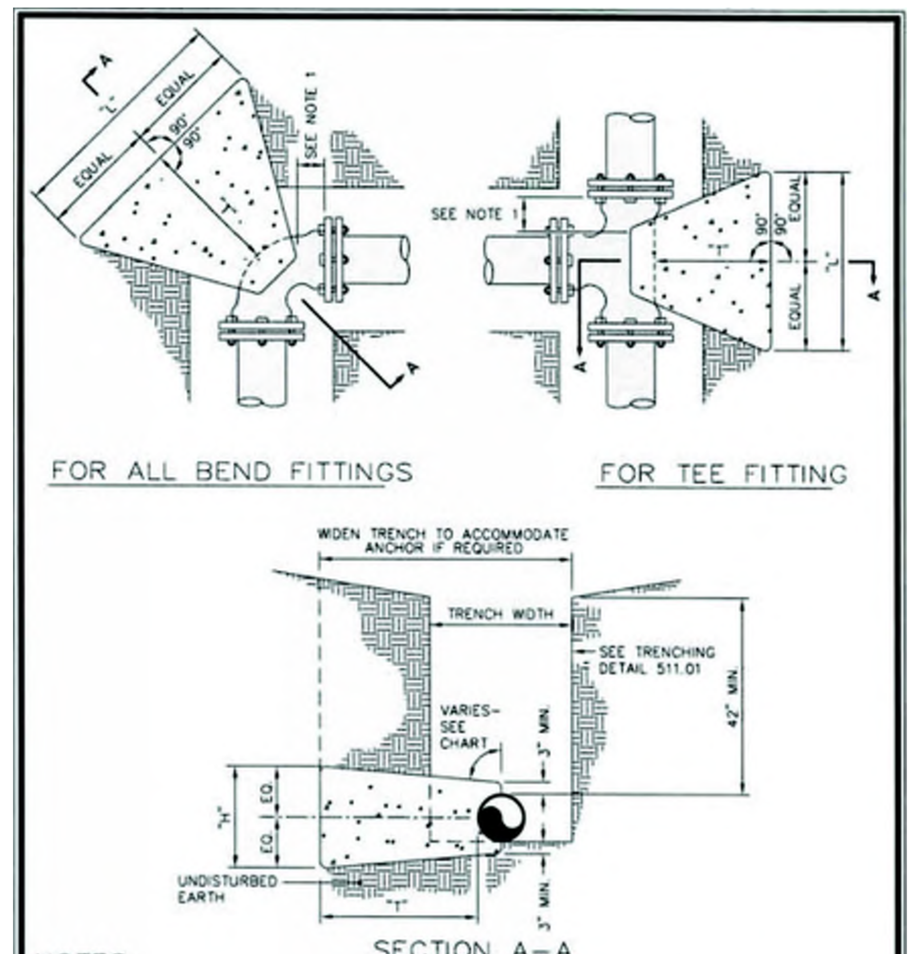

NOTES:
1. Concrete blocking is to be formed to ensure accessibility to fittings and poured against undisturbed earth.
2. Fittings are to be completely wrapped with plastic, prior to pouring concrete.
3. Concrete to be minimum 3,000 psi. @ 28 days.

ORANGE WATER AND SEWER AUTHORITY

BLOCKING DETAIL for HORIZONTAL BENDS AND TEE — SCALE: Not To Scale — DETAIL # 512.02 — REVISION DATE: August 15, 2003 — SHEET # 1 of 4

TEST PRESSURE = 150 P.S.I.

PIPE SIZE	TYPE FITTING	"L"	"H"	"T"	VOLUME CONCRETE CU. YD.
<4 INCHES	11 1/4°	---	---	---	---
	22 1/2°	1.00	1.00	1.50	0.06
	45°	1.00	1.00	1.50	0.06
	90°	1.00	1.00	2.50	0.09
	TEE / PLUG	1.00	1.00	2.00	0.07
4 INCHES	11 1/4°	1.00	1.00	2.50	0.09
	22 1/2°	1.00	1.00	2.50	0.09
	45°	1.00	1.00	2.50	0.09
	90°	1.50	1.50	2.50	0.15
	TEE / PLUG	1.50	1.50	2.00	0.12
6 INCHES	11 1/4°	1.50	1.50	2.50	0.15
	22 1/2°	1.50	1.50	2.50	0.15
	45°	1.50	1.50	2.50	0.15
	90°	2.00	2.00	3.00	0.28
	TEE / PLUG	2.00	2.00	2.50	0.23
8 INCHES	11 1/4°	2.00	2.00	2.50	0.23
	22 1/2°	2.00	2.00	2.50	0.23
	45°	2.00	2.00	2.75	0.25
	90°	3.00	2.00	3.00	0.39
	TEE / PLUG	3.00	2.00	2.50	0.32
12 INCHES	11 1/4°	2.00	2.00	3.00	0.28
	22 1/2°	2.00	2.00	3.00	0.28
	45°	3.00	2.50	3.00	0.47
	90°	4.50	3.00	3.50	0.94
	TEE / PLUG	4.50	3.00	3.00	0.81
16 INCHES	11 1/4°	2.00	2.00	3.00	0.28
	22 1/2°	3.00	2.00	3.00	0.39
	45°	4.00	3.00	3.50	0.84
	90°	6.50	3.50	3.50	1.54
	TEE / PLUG	6.50	3.50	3.00	1.32

CHART NOTES:
1. If blocking excavation is in lightly compacted fill areas, or in areas where boulders or stumps have been removed, blocking size must be re-sized for the specific location/circumstance by a NC licensed Professional Engineer.
2. Blocking sizes shown in these tables assume the following:
   a. Blocking is constructed in residual soils as shown in detail
   b. Soil bearing pressure = 2000 psf
   c. Velocity of flow = 15 fps
3. This detail not applicable to reducing bends.
4. Neither the weight of the concrete blocking nor friction between concrete blocking and soil was added into blocking sizes computation. Therefore, blocking size is conservative.

ORANGE WATER AND SEWER AUTHORITY

BLOCKING DETAIL for HORIZONTAL BENDS AND TEE — SCALE: Not To Scale — DETAIL # 512.02 — REVISION DATE: August 15, 2003 — SHEET # 2 of 4

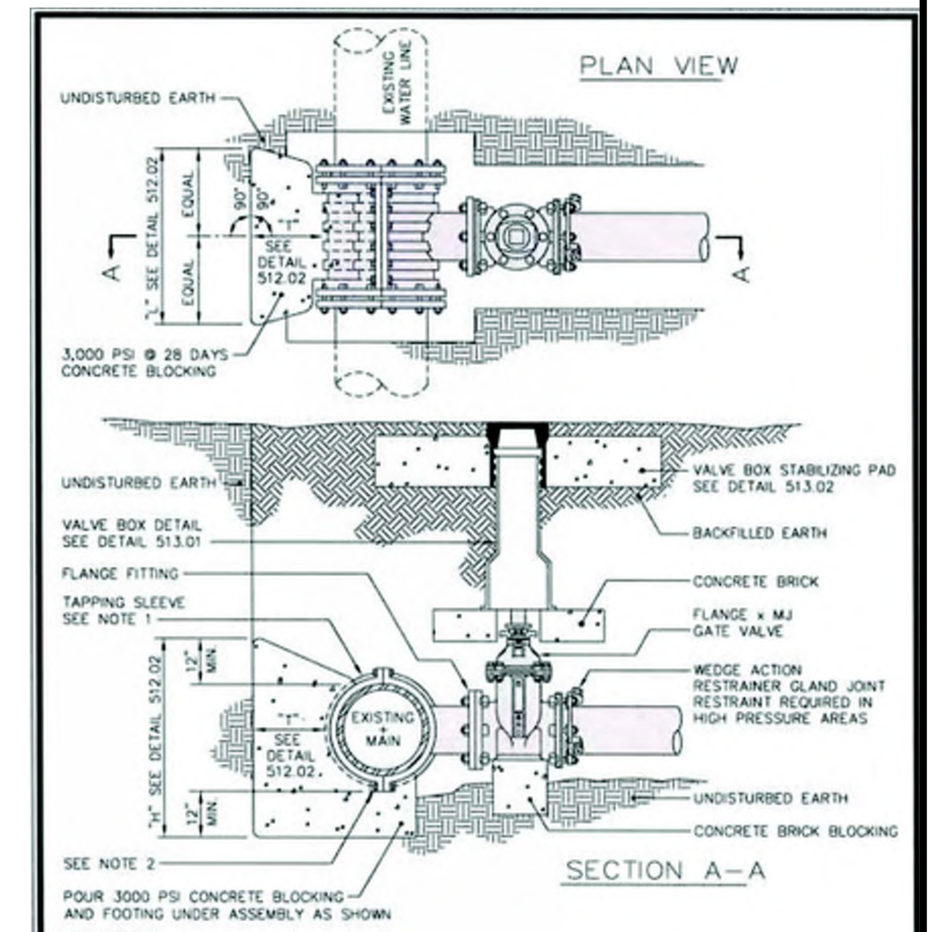

NOTES:
1. Concrete blocking is to be formed to ensure accesibility to fittings and poured against undisturbed earth.
2. Fittings are to be completely wrapped with plastic, prior to pouring concrete.
3. Concrete to be minimum 3,000 psi. @ 28 days.
4. Taps onto in-service mains by OWASA personnel only.

ORANGE WATER AND SEWER AUTHORITY

4" to 12" STANDARD TAPPING SLEEVE and VALVE ASSEMBLY — SCALE: Not To Scale — DETAIL # 512.04 — REVISION DATE: August 15, 2003 — SHEET # 1 of 1

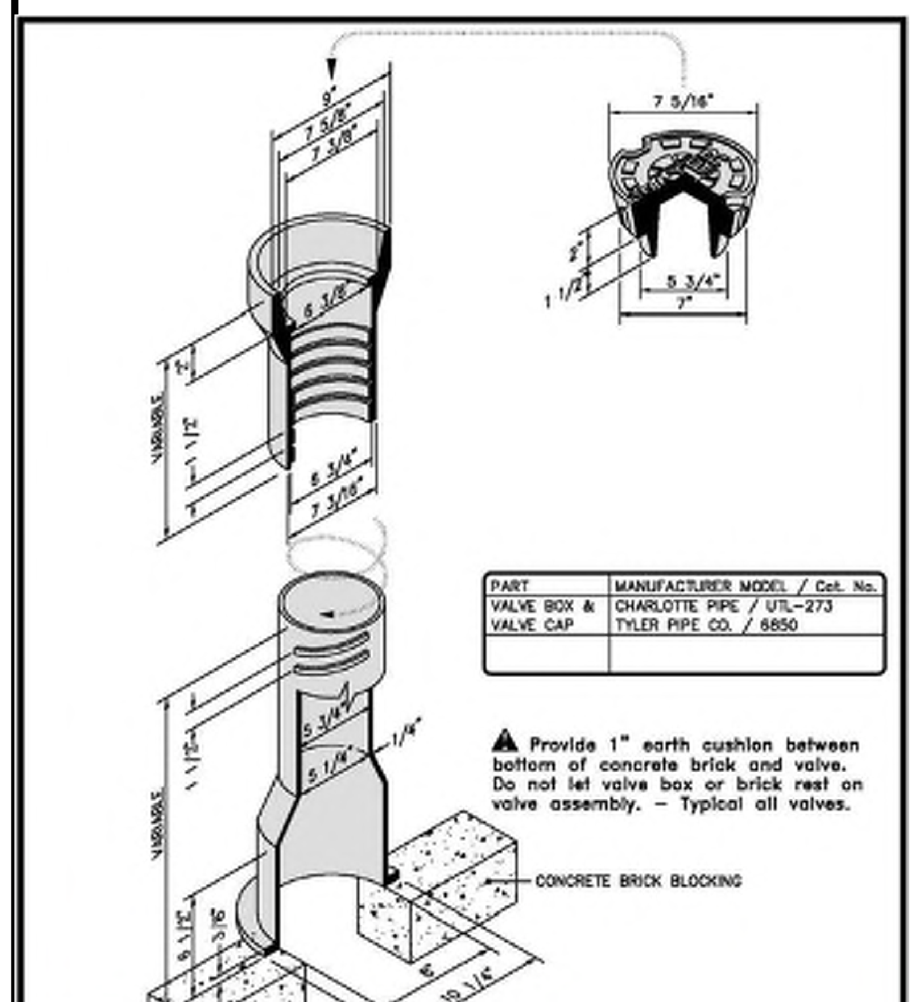

PART	MANUFACTURER MODEL / Cat. No.
VALVE BOX & VALVE CAP	CHARLOTTE PIPE / UTL–273 TYLER PIPE CO. / 6850

▲ Provide 1" earth cushion between bottom of concrete brick and valve. Do not let valve box or brick rest on valve assembly. – Typical all valves.

NOTES:
1. Use heavy duty traffic lid marked "WATER".

ORANGE WATER AND SEWER AUTHORITY

STANDARD SCREW VALVE BOX DETAIL — SCALE: Not To Scale — DETAIL # 513.01 — REVISION DATE: August 15, 2012 — SHEET # 1 of 1

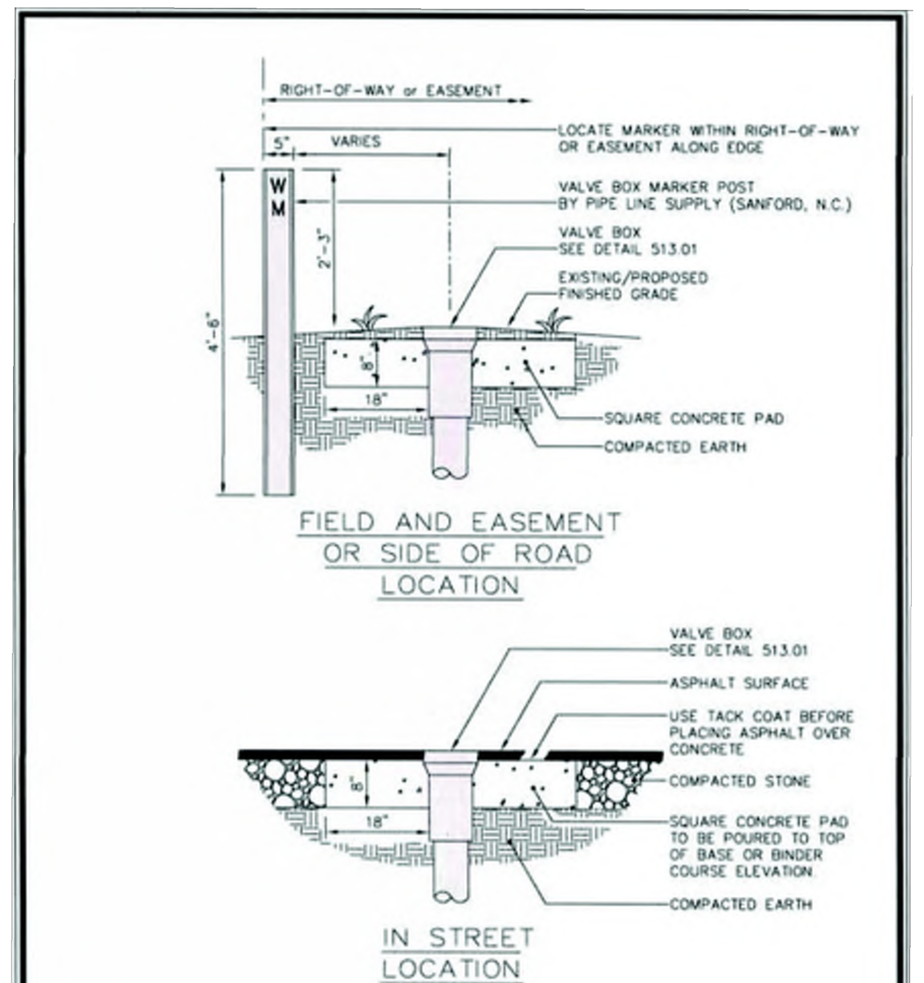

NOTES:
1. Concrete to be minimum 3,000 PSI @ 28 days.

ORANGE WATER AND SEWER AUTHORITY

VALVE BOX STABILIZING PAD DETAILS — SCALE: Not To Scale — DETAIL # 513.02 — REVISION DATE: August 15, 2003 — SHEET # 1 of 1

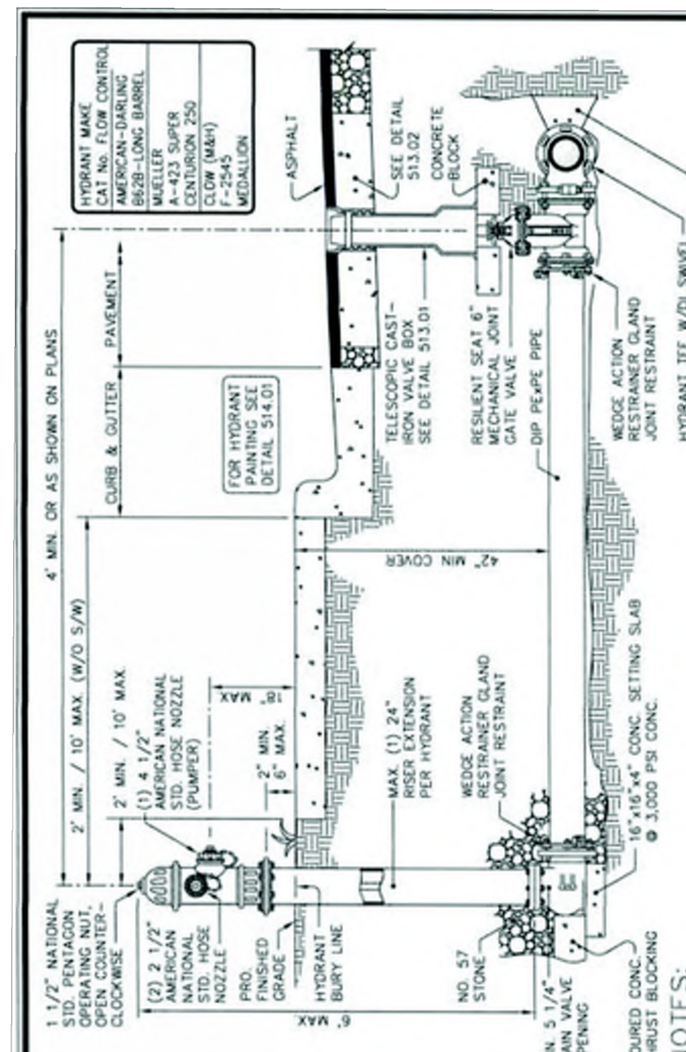

NOTES:
1. Omitted
2. Hydrants to be placed with pumper nozzle facing the street or as otherwise directed by OWASA.
3. When valve box is placed outside of pavement, provide concrete stabilization pad. (detail 513.02)
4. Omitted
5. Where hydrant is set behind guardrail, centerline of pumper nozzle to be a minimum of 12" and a maximum of 18" above top of guardrail. Center of hydrant to be a minimum of 3 feet from guardrail.
6. Fire hydrant to be oiled & greased and cap to be sprayed (Non-petroleum – based) after installation.
7. Do not locate hydrants in sidewalks or block pedestrian flow.

ORANGE WATER AND SEWER AUTHORITY

TYP. RESTRAINED JT. FIRE HYDRANT STREETS with CURB & GUTTER — SCALE: Not To Scale — DETAIL # 514.03 — REVISION DATE: August 15, 2003 — SHEET # 2 of 2

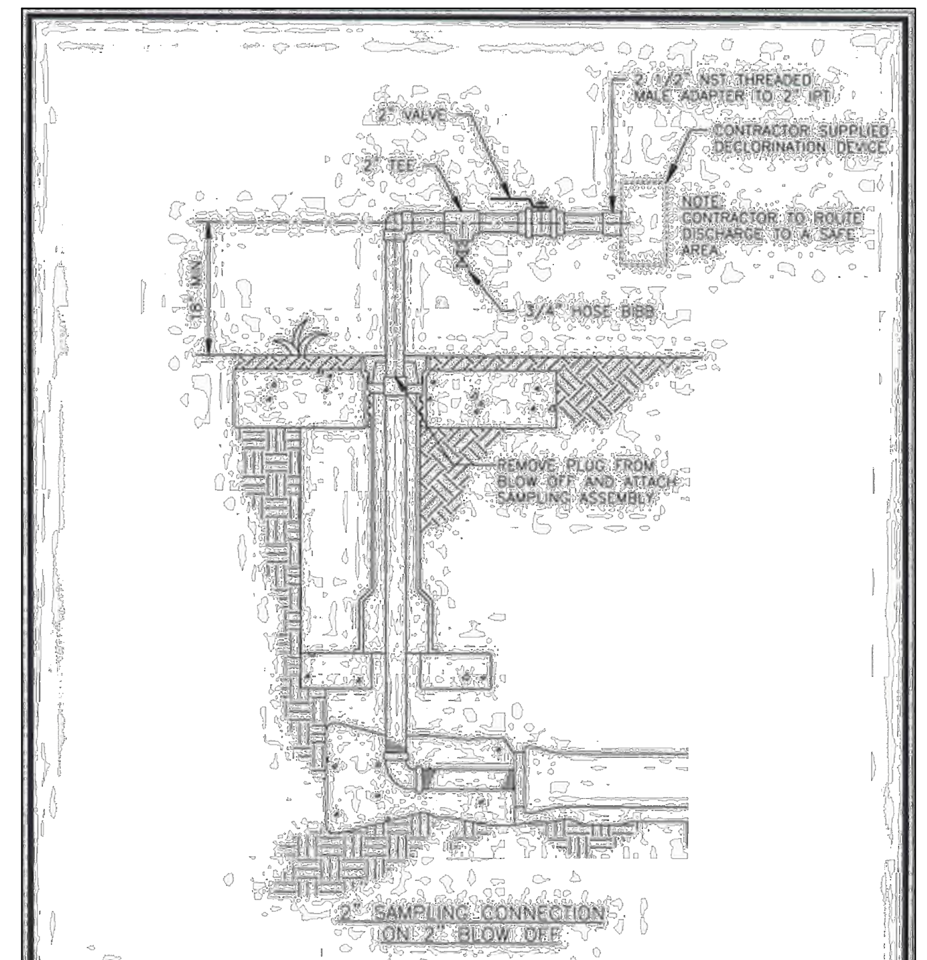

NOTE:
ALL PIPING, VALVES AND FITTINGS SHALL BE IN ACCORDANCE WITH OWASA SPECIFICATIONS.

ORANGE WATER AND SEWER AUTHORITY

PURITY SAMPLING CONNECTION DETAILS - 2" BLOW OFF LINE — SCALE: Not To Scale

Pennoni — Firm License F-1267

PENNONI ASSOCIATES INC.
5430 Wade Park Boulevard, #106
Raleigh, NC 27607
T 919.929.1173 F 919.493.6548

ALL DIMENSIONS MUST BE VERIFIED BY CONTRACTOR AND OWNER MUST BE NOTIFIED OF ANY DISCREPANCIES BEFORE PROCEEDING WITH WORK

NORTH CAROLINA PROFESSIONAL ENGINEER SEAL 047736 Ethan S Mindrebo — Preliminary

TARHEEL LODGING REDEVELOPMENT PHASE 2

1742 FORDHAM BLVD.
CHAPEL HILL, NC

WATER DETAILS

TARHEEL LODGING, LLC & UNICORN GROUP FIFTEEN, LLC
6110 FALCON BRIDDGE ROAD
CHAPEL HILL, NC 27517

DATE	NO.	REVISIONS	BY
04/28/2023	23	PHASE 2 MODIFICATIONS	DTR

ALL DOCUMENTS PREPARED BY PENNONI ASSOCIATES ARE INSTRUMENTS OF SERVICE IN RESPECT OF THE PROJECT. THEY ARE NOT INTENDED OR REPRESENTED TO BE SUITABLE FOR REUSE BY OWNER OR OTHERS ON THE EXTENSIONS OF THE PROJECT OR ON ANY OTHER PROJECT. ANY REUSE WITHOUT WRITTEN VERIFICATION OR ADAPTATION BY PENNONI ASSOCIATES FOR THE SPECIFIC PURPOSE INTENDED WILL BE AT OWNERS SOLE RISK AND WITHOUT LIABILITY OR LEGAL EXPOSURE TO PENNONI ASSOCIATES; AND OWNER SHALL INDEMNIFY AND HOLD HARMLESS PENNONI ASSOCIATES FROM ALL CLAIMS, DAMAGES, LOSSES AND EXPENSES ARISING OUT OF OR RESULTING THEREFROM.

PROJECT	RKINV18001
DATE	2018-05-21
DRAWING SCALE	N.T.S.
DRAWN BY	RLM/CSB
APPROVED BY	ESM

CS6041

SHEET 30 OF 39

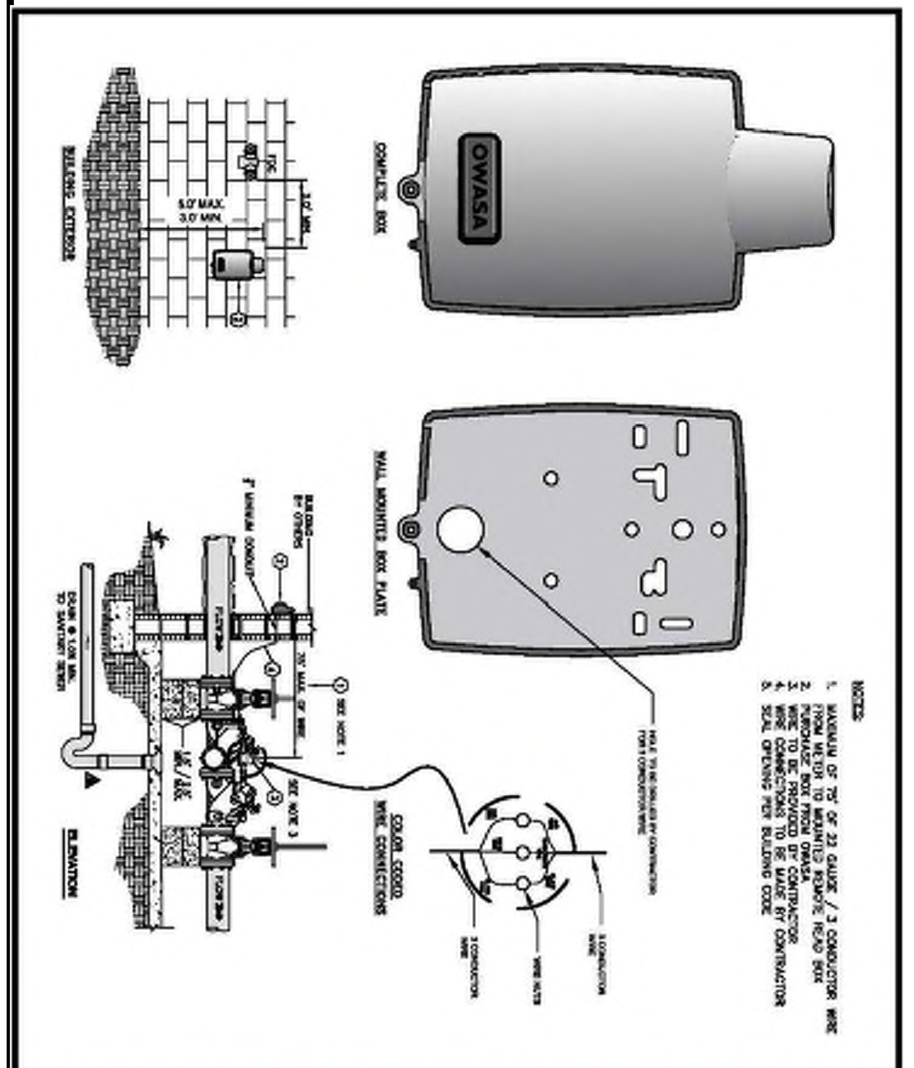

400 Jones Ferry Road, PO Box 366, Carrboro, NC 27510-0366 — **ORANGE WATER AND SEWER AUTHORITY** — Voice (919) 968-4421, FAX (919) 968-4464, www.owasa.org
USE WITH THE OWASA STANDARD SPECIFICATIONS ONLY
OWASA Quality Service Since 1977

DETECTOR METER INSTALLATION (FIRE SYSTEM)

SCALE: Not To Scale | DETAIL #: 515.03 | REVISION DATE: DECEMBER 9, 2020 | SHEET #: 1 of 1

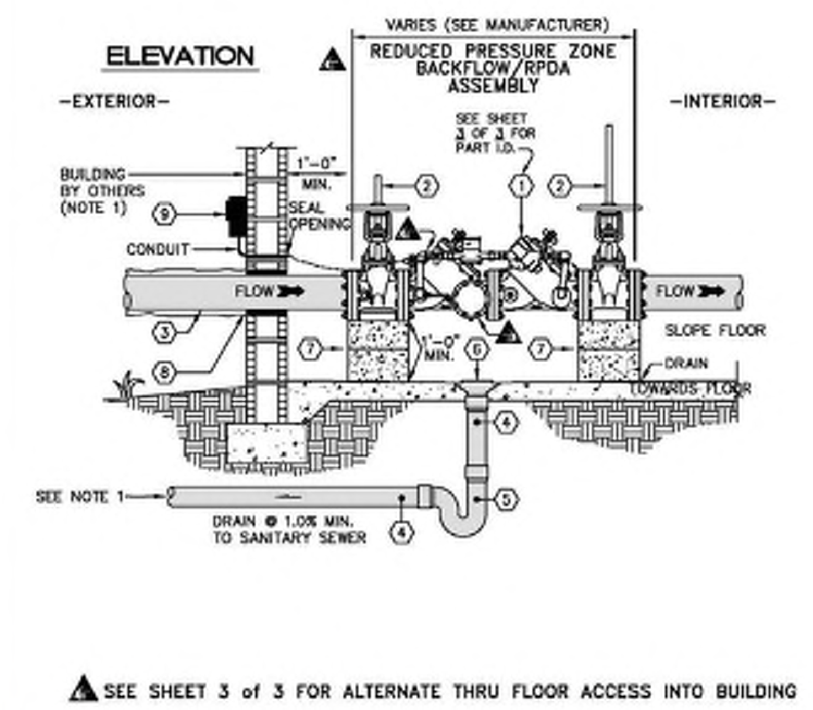

SEE SHEET 3 of 3 FOR ALTERNATE THRU FLOOR ACCESS INTO BUILDING

NOTES:
1. OPTIONAL FLOOR DRAIN.

400 Jones Ferry Road, PO Box 366, Carrboro, NC 27510-0366 — **ORANGE WATER AND SEWER AUTHORITY** — Voice (919) 968-4421, FAX (919) 968-4464, www.owasa.org
USE WITH THE OWASA STANDARD SPECIFICATIONS ONLY
OWASA Quality Service Since 1977

2 1/2" to 10" RPZ, RPDA ASSEMBLY (INDOOR)

SCALE: Not To Scale | DETAIL #: 515.09 | REVISION DATE: December 20, 2016 | SHEET #: 1 of 3

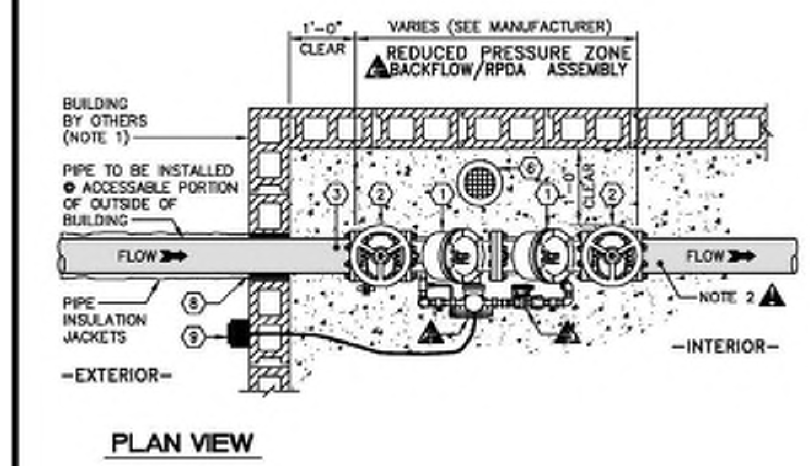

NOTES:
1. Backflow assembly is to be installed at an accessible portion of the building, provide doorway & key.
2. For critical facilities, provide bypass line with backflow assembly.
3. Provide minimum 3" annular clearance around riser.

400 Jones Ferry Road, PO Box 366, Carrboro, NC 27510-0366 — **ORANGE WATER AND SEWER AUTHORITY** — Voice (919) 968-4421, FAX (919) 968-4464, www.owasa.org
USE WITH THE OWASA STANDARD SPECIFICATIONS ONLY
OWASA Quality Service Since 1977

2 1/2" to 10" RPZ, RPDA ASSEMBLY (INDOOR)

SCALE: Not To Scale | DETAIL #: 515.09 | REVISION DATE: December 20, 2016 | SHEET #: 2 of 3

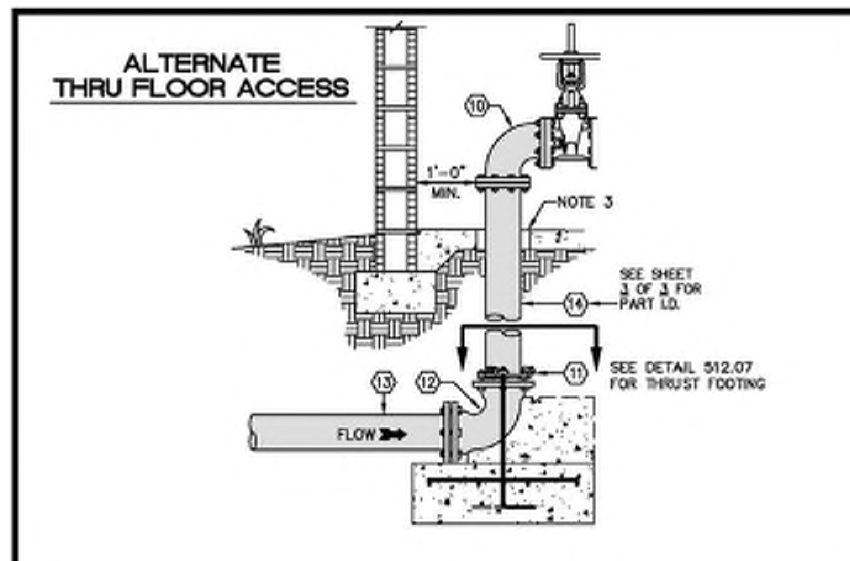

#	PART	MANUFACTURER MODEL / Cat. No.
1	BACKFLOW PREVENTER, AS APPLICABLE	USC & ASSE APPROVED
2	OS&Y GATE VALVE WITH RESILIENT SEATS	TO BE APPROVED BY OWASA
3	DIP FLANGE x FLANGE PIPE (VERIFY LENGTH)	AMERICAN CAST IRON PIPE, or GRIFFIN PIPE CO. TO BE APPROVED BY OWASA
4	CISP OR PVC SCH 40 PIPE	----
5	CISP OR PVC SCH 40 "P" TRAP	----
6	FLOOR DRAIN	SIZE & TYPE DETERMINED BY NC PE. TO BE APPROVED BY OWASA
7	MASONRY BLOCK	
8	WALL SLEEVE with LINK SEAL	TO BE APPROVED BY OWASA
9	METER BOX WITH ERT AND METER	PURCHASED FROM OWASA
10	90° DIP FLANGE x FLANGE ELBOW	AMERICAN CAST IRON PIPE, or GRIFFIN PIPE CO., or UNION-TYLER PIPE CO., or U.S. PIPE & FOUNDRY
11	WEDGE ACTION RESTRAINER GLAND JOINT RESTRAINT	EBAA IRON SALES, INC. , FORD
12	90° DIP MJ x MJ ELBOW	AMERICAN CAST IRON PIPE, GRIFFIN PIPE CO., UNION-TYLER PIPE CO., U.S. PIPE & FOUNDRY
13	DIP FLANGE x PE PIPE (VERIFY LENGTH)	AMERICAN CAST IRON PIPE, GRIFFIN PIPE CO., UNION-TYLER PIPE CO., U.S. PIPE & FOUNDRY
14	3" THRU 10" DIP	AMERICAN CAST IRON PIPE, GRIFFIN PIPE CO., UNION-TYLER PIPE CO., U.S. PIPE & FOUNDRY

400 Jones Ferry Road, PO Box 366, Carrboro, NC 27510-0366 — **ORANGE WATER AND SEWER AUTHORITY** — Voice (919) 968-4421, FAX (919) 968-4464, www.owasa.org
USE WITH THE OWASA STANDARD SPECIFICATIONS ONLY
OWASA Quality Service Since 1977

2 1/2" to 10" RPZ, RPDA ASSEMBLY (INDOOR)

SCALE: Not To Scale | DETAIL #: 515.09 | REVISION DATE: December 20, 2016 | SHEET #: 3 of 3

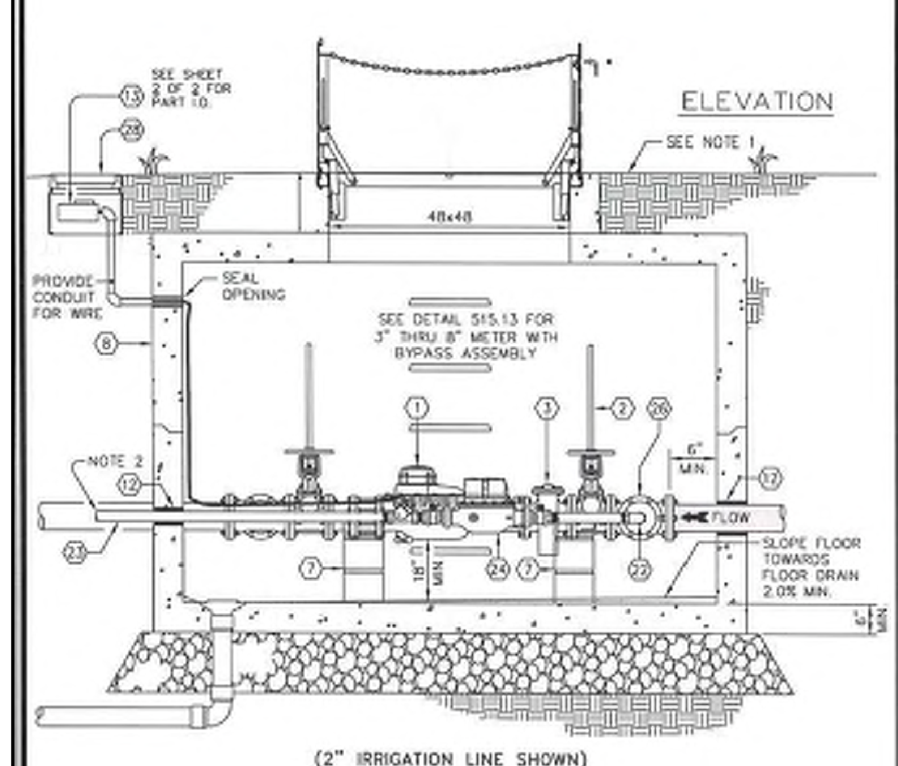

NOTES:
1. Ensure positive surface grade away from box.
2. See std. details 515.06, 515.07 and 515.08 for backflow prevention assembly and vault box as applicable.

400 Jones Ferry Road, PO Box 366, Carrboro, NC 27510-0366 — **ORANGE WATER AND SEWER AUTHORITY** — Voice (919) 968-4421, FAX (919) 968-4464, www.owasa.org
USE WITH THE OWASA STANDARD SPECIFICATIONS ONLY
OWASA Quality Service Since 1977

1" OR 2" IRRIGATION METER ON A 3" TO 8" UNDERGROUND METER VAULT

SCALE: Not To Scale | DETAIL #: 515.15 | REVISION DATE: April 13, 2007 | SHEET #: 1 of 2

#	PART	MANUFACTURER MODEL / Cat. No.
1	COMPOUND METER OR TURBINE METER	TO BE APPROVED BY OWASA
2	OS&Y GATE VALVE WITH RESILIENT SEATS	TO BE APPROVED BY OWASA
3	STRAINER	TO BE APPROVED BY OWASA
7	MORTARED MASONRY BLOCK PIPE SUPPORTS	
8	PRECAST CONCRETE UTILITY VAULT BOX. MIN. 4,000 PSI @ 28 DAYS VERIFY FITTINGS WILL FIT INSIDE BOX BEFORE ORDERING	STAY-RIGHT PRECAST VAULT, H20 LOAD RATING (OR APPROVED EQUIVALENT)
12	WALL SLEEVE WITH LINK SEAL (OR APPROVED EQUIVALENT)	TO BE APPROVED BY OWASA
13	REMOTE METER READOUT (IN GALLONS) ELECTRONIC ERT	TO BE APPROVED BY OWASA
21	THREADED PIPE NIPPLE (BRASS ONLY)	
22	THREADED 90° ELBOW (BRASS ONLY)	
24	1" OR 2" METER (FOR IRRIGATION SERVICE)	TO BE APPROVED BY OWASA
26	DIP FLANGED CROSS	AMERICAN CAST IRON PIPE, UNION-TYLER PIPE CO., or U.S. PIPE & FOUNDRY
27	DIP FLANGED PLUG TAPPED FOR 1" OR 2" (AS APPLICABLE)	AMERICAN CAST IRON PIPE, UNION-TYLER PIPE CO., or U.S. PIPE & FOUNDRY
28	METER BOX	CDR SYSTEMS CORP. / WA04-1118-12C MID-STATES PLASTICS, INC. / MSBC 1118-12
29	STANDARD 1" OR 2" SETTER	

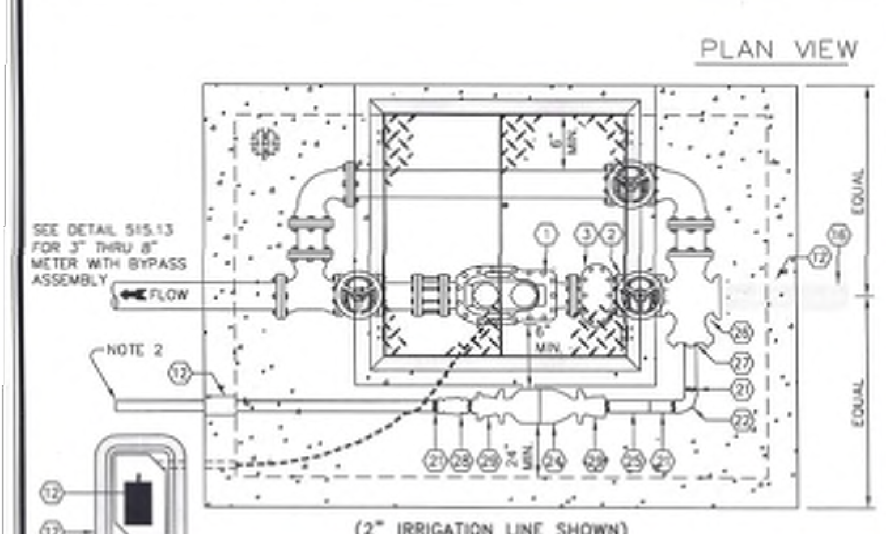

400 Jones Ferry Road, PO Box 366, Carrboro, NC 27510-0366 — **ORANGE WATER AND SEWER AUTHORITY** — Voice (919) 968-4421, FAX (919) 968-4464, www.owasa.org
USE WITH THE OWASA STANDARD SPECIFICATIONS ONLY
OWASA Quality Service Since 1977

1" OR 2" IRRIGATION METER ON A 3" TO 8" UNDERGROUND METER VAULT

SCALE: Not To Scale | DETAIL #: 515.15 | REVISION DATE: April 13, 2007 | SHEET #: 2 of 2

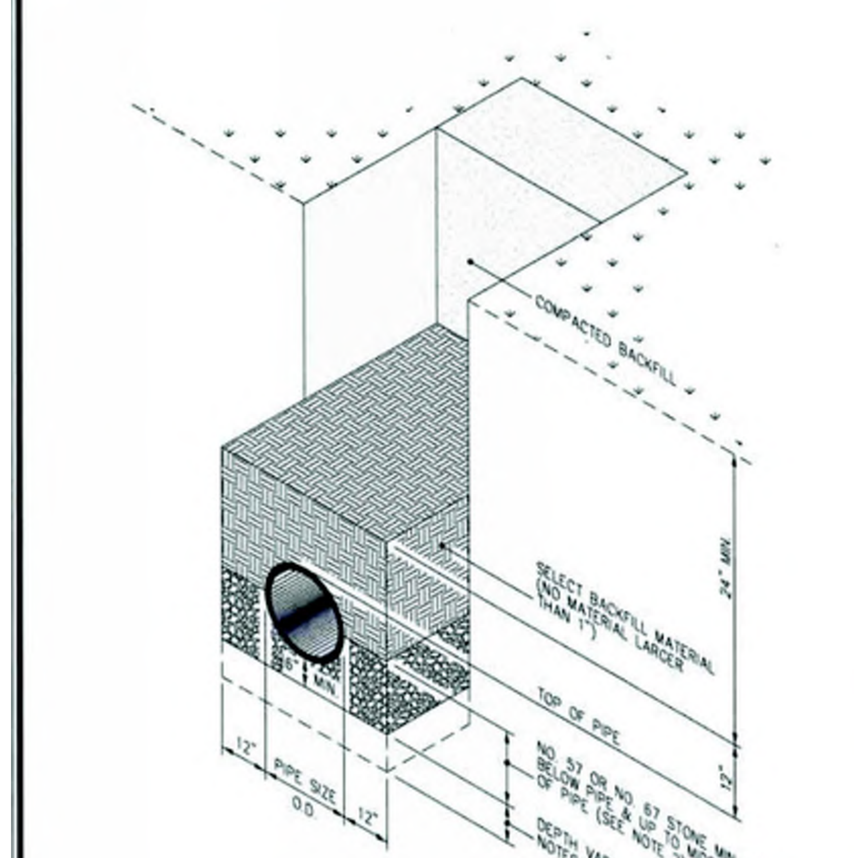

NOTES:
1. Foundation stone shall be required when soil conditions are unsuitable.
2. An additional 1 inch depth of cushioning material will be required for each additional 2 feet of trench depth in excess of 16 feet up to a maximum of 12 inches of cushioning material.

400 Jones Ferry Road, PO Box 366, Carrboro, NC 27510-0366 — **ORANGE WATER AND SEWER AUTHORITY** — Voice (919) 968-4421, FAX (919) 968-4464, www.owasa.org
USE WITH THE OWASA STANDARD SPECIFICATIONS ONLY
OWASA Quality Service Since 1977

SANITARY SEWER BEDDING DETAIL

SCALE: Not To Scale | DETAIL #: 531.01 | REVISION DATE: August 15, 2003 | SHEET #: 1 of 1

Pennoni
Firm License F-1267
PENNONI ASSOCIATES INC.
5430 Wade Park Boulevard, #106
Raleigh, NC 27607
T 919.929.1173 F 919.493.6548

ALL DIMENSIONS MUST BE VERIFIED BY CONTRACTOR AND OWNER MUST BE NOTIFIED OF ANY DISCREPANCIES BEFORE PROCEEDING WITH WORK

NORTH CAROLINA PROFESSIONAL ENGINEER SEAL 047736 Ethan S Mindrebo
Preliminary

TARHEEL LODGING REDEVELOPMENT PHASE 2
1742 FORDHAM BLVD.
CHAPEL HILL, NC

WATER DETAILS

TARHEEL LODGING, LLC & UNICORN GROUP FIFTEEN, LLC
6110 FALCON BRIDDGE ROAD
CHAPEL HILL, NC 27517

DATE	NO.	REVISIONS	BY
04/28/2023	23	PHASE 2 MODIFICATIONS	DTR

ALL DOCUMENTS PREPARED BY PENNONI ASSOCIATES ARE INSTRUMENTS OF SERVICE IN RESPECT OF THE PROJECT. THEY ARE NOT INTENDED OR REPRESENTED TO BE SUITABLE FOR REUSE BY OWNER OR OTHERS ON THE EXTENSIONS OF THE PROJECT OR ON ANY OTHER PROJECT. ANY REUSE WITHOUT WRITTEN VERIFICATION OR ADAPTATION BY PENNONI ASSOCIATES FOR THE SPECIFIC PURPOSE INTENDED WILL BE AT OWNERS SOLE RISK AND WITHOUT LIABILITY OR LEGAL EXPOSURE TO PENNONI ASSOCIATES; AND OWNER SHALL INDEMNIFY AND HOLD HARMLESS PENNONI ASSOCIATES FROM ALL CLAIMS, DAMAGES, LOSSES AND EXPENSES ARISING OUT OF OR RESULTING THEREFROM.

PROJECT	RKINV18001
DATE	2018-05-21
DRAWING SCALE	1" = 40'
DRAWN BY	RLM/CSB
APPROVED BY	ESM

CS6042

SHEET 31 OF 39

U:\Accounts\RKINV\RKINV18001 - Hotel Site Chapel Hill\DESIGN_SHEETS\WATER DETAILS.dwg PLOTTED: 6/19/2023 11:38 AM, BY: Jason Thibodeaux PLOTSTYLE: Pennoni NCS.stb PROJECT STATUS: ---

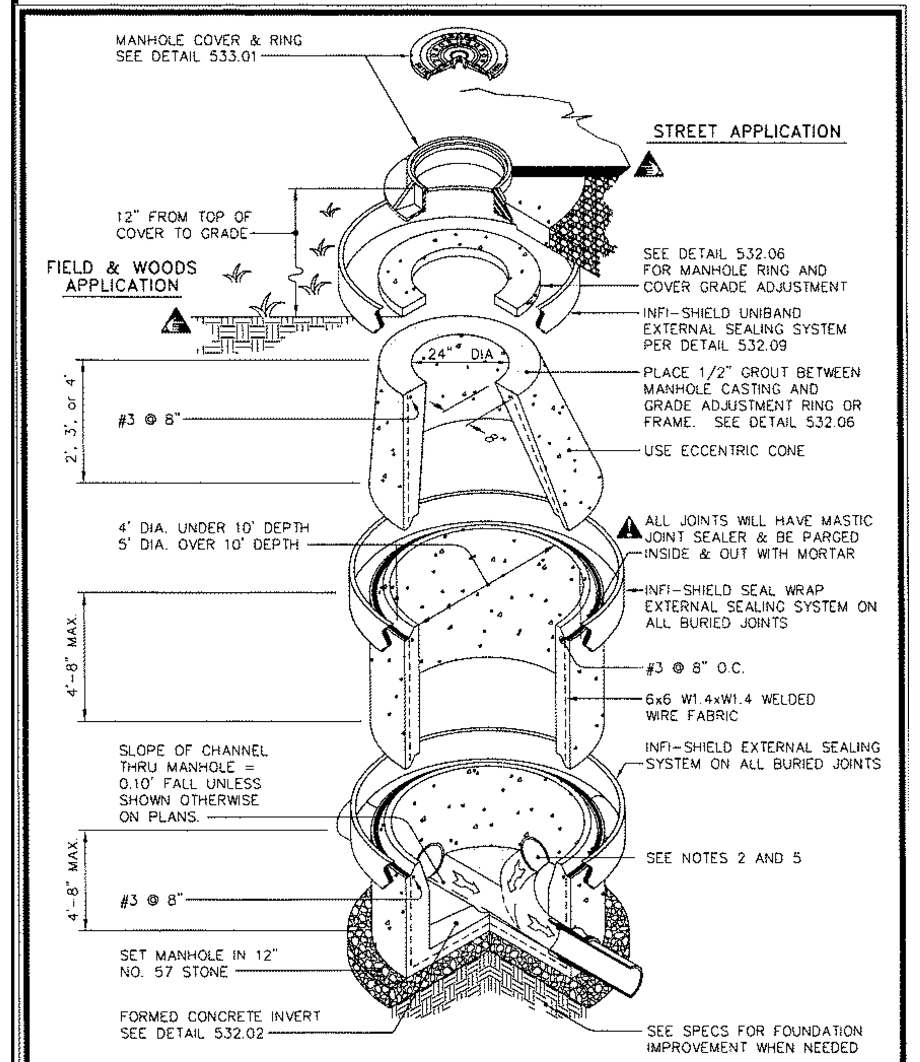

400 Jones Ferry Road, PO Box 366, Carrboro, NC 27510-0366 — ORANGE WATER AND SEWER AUTHORITY — Voice (919) 968-4421, FAX (919) 968-4464, www.owasa.org
USE WITH THE OWASA STANDARD SPECIFICATIONS ONLY
OWASA — Quality Service Since 1977

STANDARD ECCENTRIC MANHOLE DETAIL

SCALE: Not To Scale | DETAIL #: 532.01 | REVISION DATE: April 13, 2007 | SHEET #: 1 of 2

PART	MANUFACTURER MODEL / Cat. No
SLEEVE BOOTS	KOR-N-SEAL or PSX

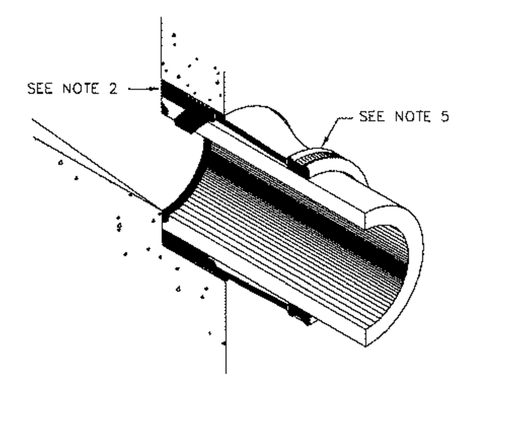

NOTES:
1. Concrete strength to be 4,000 PSI minimum.
2. Pipes will be grouted inside and out.
3. Joints will have mastic joint sealer and be parged inside and out with mortar.
4. Reinforcement design to conform to the requirements of ASTM C478.
5. Flexible sleeve boots cast in place or installed with stainless steel expander rings as manufactured by Kor-N-Seal or PSX shall be used for pipe connections. Boots shall be secured to pipe using (2) stainless steel bands. Precast inverts will not be accepted, unless otherwise directed by OWASA's inspectors.

400 Jones Ferry Road, PO Box 366, Carrboro, NC 27510-0366 — ORANGE WATER AND SEWER AUTHORITY — Voice (919) 968-4421, FAX (919) 968-4464, www.owasa.org
USE WITH THE OWASA STANDARD SPECIFICATIONS ONLY

STANDARD ECCENTRIC MANHOLE DETAIL

SCALE: Not To Scale | DETAIL #: 532.01 | REVISION DATE: April 13, 2007 | SHEET #: 2 of 2

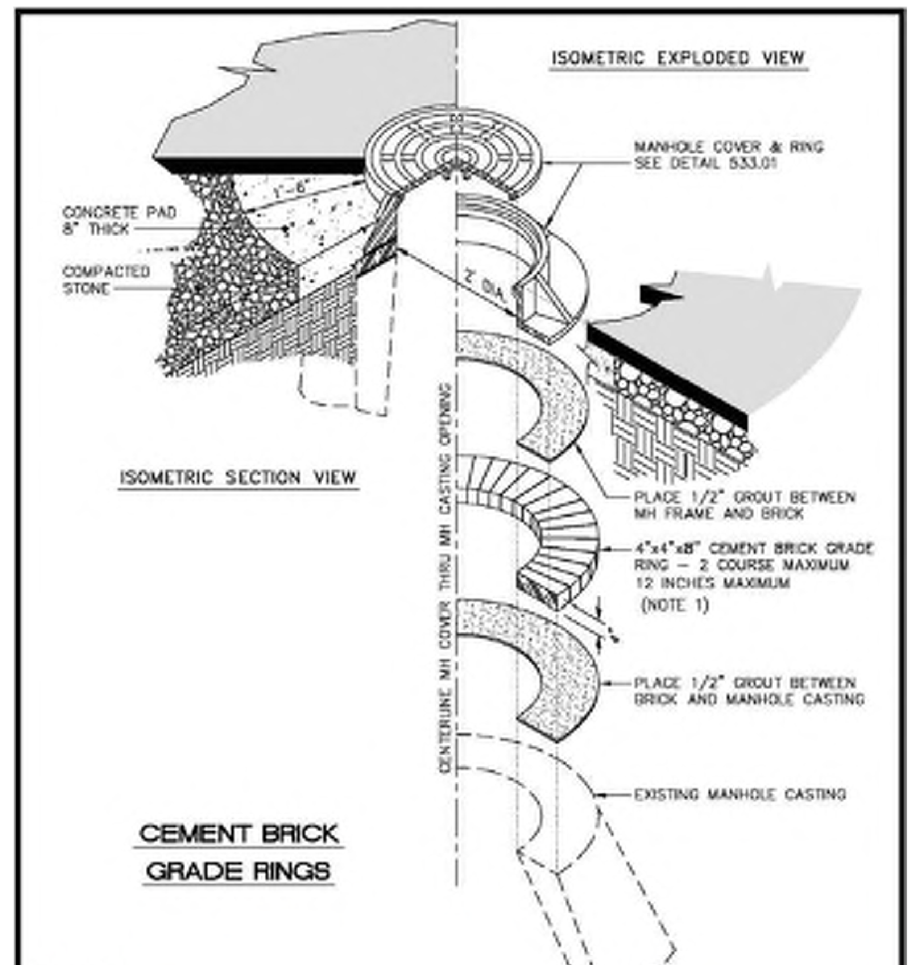

NOTES:
1. Mortar seal inside & out on brick course.
2. Install Infi-Shield Uni-Band as manufactured by Sealing Systems, Inc. per detail 532.09.

400 Jones Ferry Road, PO Box 366, Carrboro, NC 27510-0366 — ORANGE WATER AND SEWER AUTHORITY — Voice (919) 968-4421, FAX (919) 968-4464, www.owasa.org
USE WITH THE OWASA STANDARD SPECIFICATIONS ONLY

MANHOLE RING AND COVER GRADE ADJUSTMENT

SCALE: Not To Scale | DETAIL #: 532.06 | REVISION DATE: December 1, 2009 | SHEET #: 1 of 1

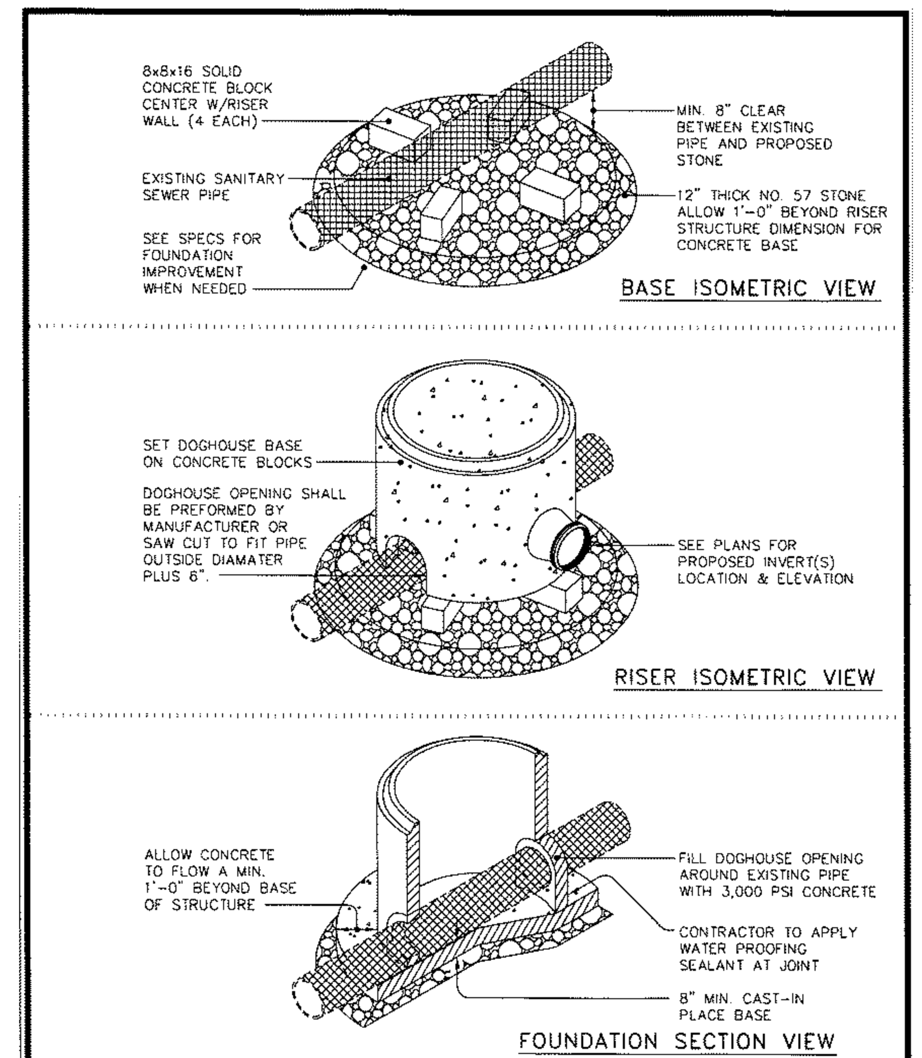

400 Jones Ferry Road, PO Box 366, Carrboro, NC 27510-0366 — ORANGE WATER AND SEWER AUTHORITY — Voice (919) 968-4421, FAX (919) 968-4464, www.owasa.org
USE WITH THE OWASA STANDARD SPECIFICATIONS ONLY

PRECAST CONCRETE DOGHOUSE MANHOLE

SCALE: Not To Scale | DETAIL #: 532.08 | REVISION DATE: April 13, 2007 | SHEET #: 1 of 2

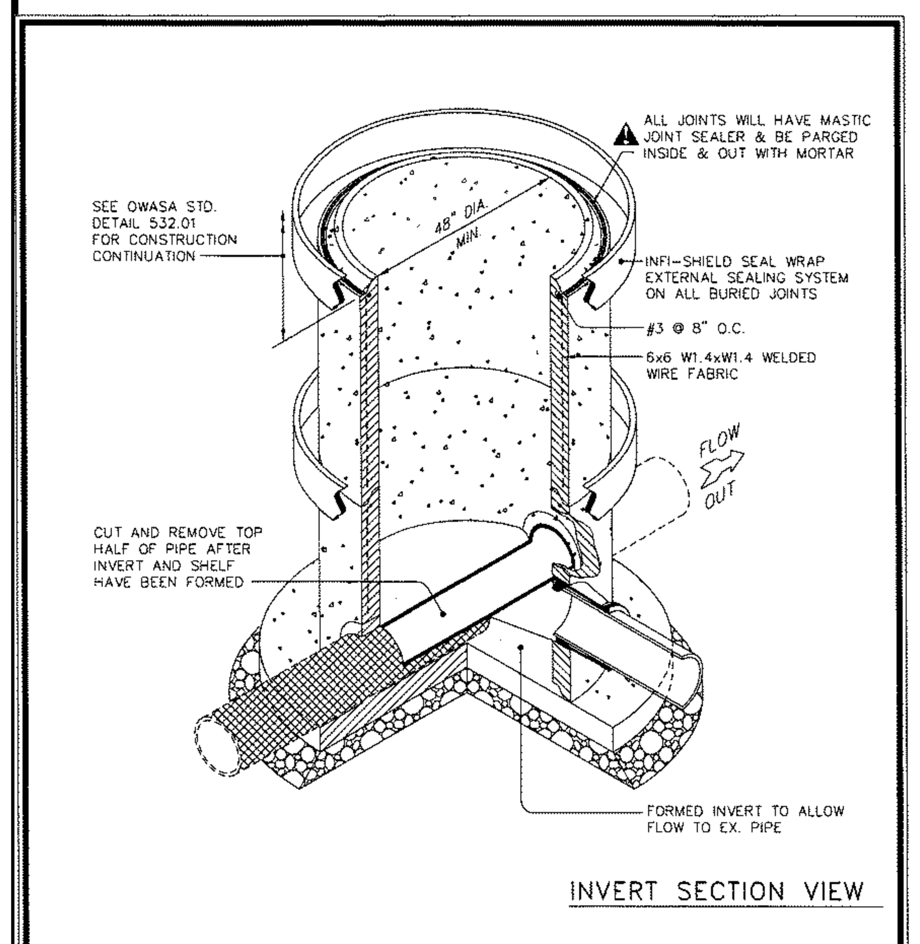

NOTES:
1. All service laterals into manhole to be core drilled and booted.
2. Maximum depth 4' dia. manhole = 10' (see specifications). Use 5' dia. manhole for depth greater than 10'.

400 Jones Ferry Road, PO Box 366, Carrboro, NC 27510-0366 — ORANGE WATER AND SEWER AUTHORITY — Voice (919) 968-4421, FAX (919) 968-4464, www.owasa.org
USE WITH THE OWASA STANDARD SPECIFICATIONS ONLY

PRECAST CONCRETE DOGHOUSE MANHOLE

SCALE: Not To Scale | DETAIL #: 532.08 | REVISION DATE: April 13, 2007 | SHEET #: 2 of 2

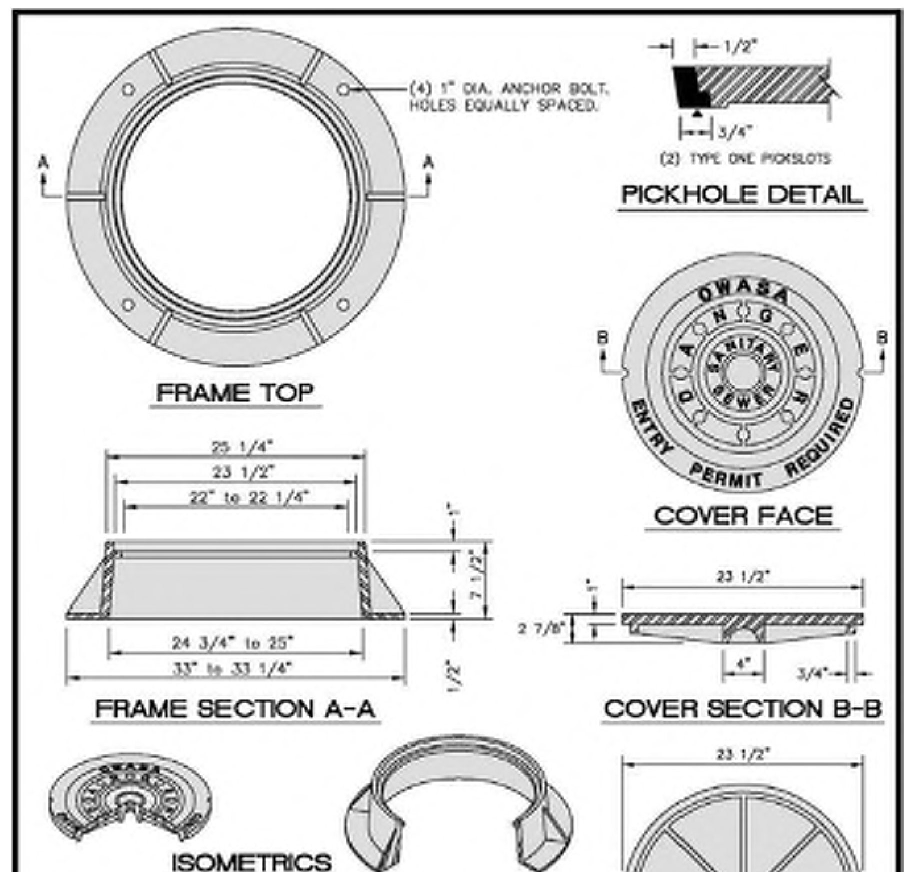

APPROVED MODELS	EAST JORDAN IRON WORKS V-1384	US FOUNDRY USF-669	CAPITOL FOUNDRY MH-2001
COVER WEIGHT	135 Lbs.	125 Lbs.	120 Lbs.
FRAME WEIGHT	180 Lbs.	190 Lbs.	190 Lbs.
LOAD RATING	HEAVY DUTY	HEAVY DUTY	HEAVY DUTY
MATERIAL	ASTM A 48 CLASS 35B	ASTM A 48 CLASS 35B	ASTM A 48 CLASS 35B
FINISH	UNCOATED	UNCOATED	UNCOATED

400 Jones Ferry Road, PO Box 366, Carrboro, NC 27510-0366 — ORANGE WATER AND SEWER AUTHORITY — Voice (919) 968-4421, FAX (919) 968-4464, www.owasa.org
USE WITH THE OWASA STANDARD SPECIFICATIONS ONLY

SANITARY SEWER MANHOLE FRAME and COVER

SCALE: Not To Scale | DETAIL #: 533.01 | REVISION DATE: February 20, 2013 | SHEET #: 1 of 1

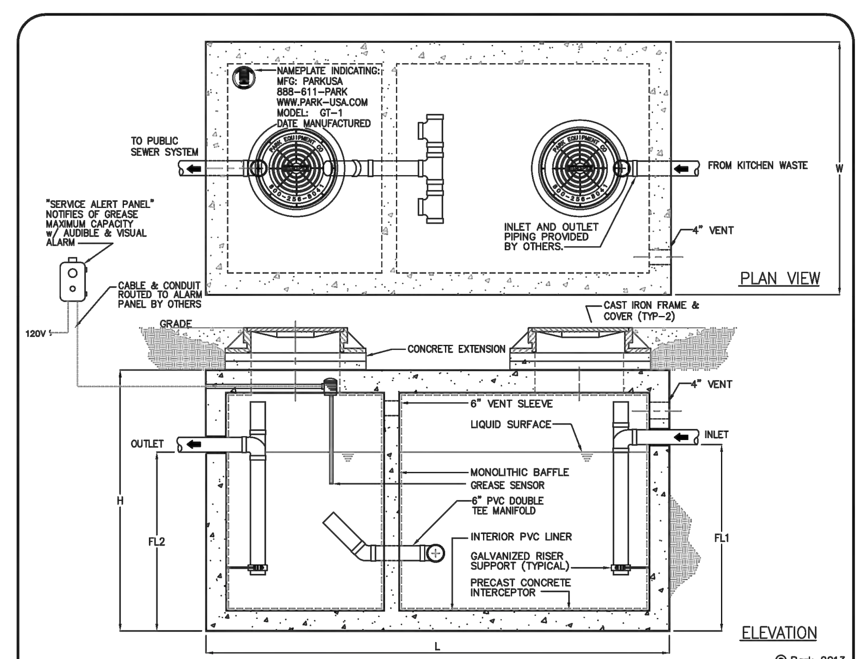

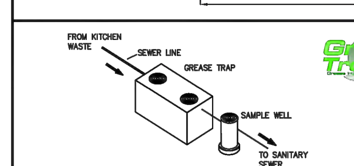

Typical applications include commercial and industrial food service kitchens where excessive grease may interfere with the proper drainage of the sewer system. The grease interceptor is generally buried below grade for gravity flow sewer systems. A sample well is utilized on the outlet side for sampling by the local water authority.

GREASE INTERCEPTOR SCHEDULE

MODEL NO.	CAPACITY USGal	GREASE CAP. (LBS)	EMPTY WT (LBS)	LENGTH L	WIDTH W	HEIGHT H	INLET FL1	OUTLET FL2
GT-500	500	1,200	9,500	7'-10"	4'-4"	4'-6"	3'-3"	3'-0"
GT-750	750	1,700	9,900	7'-10"	4'-4"	6'-0"	4'-5"	4'-2"
GT-1000	1,000	2,300	13,350	8'-8"	5'-0"	6'-0"	4'-9"	4'-6"
GT-1250	1,250	2,900	14,650	9'-2"	5'-8"	6'-0"	4'-9"	4'-6"
GT-1500	1,500	3,500	16,050	9'-2"	5'-8"	7'-0"	5'-9"	5'-6"
GT-2000	2,000	4,600	21,250	9'-0"	6'-0"	8'-0"	6'-9"	6'-6"
GT-2500	2,500	5,700	27,050	13'-0"	7'-0"	7'-0"	5'-9"	5'-6"
GT-3000	3,000	6,900	33,150	13'-0"	7'-0"	8'-0"	6'-9"	6'-6"
GT-3500	3,500	8,000	38,550	13'-0"	7'-0"	8'-6"	7'-3"	7'-0"
GT-4000	4,000	9,300	38,100	16'-0"	8'-6"	7'-0"	5'-9"	5'-6"

OTHER SIZES ARE AVAILABLE. CONTACT US FOR MORE INFORMATION

Specifications

CONCRETE: Class I/II concrete with design strength of 4500 PSI at 28 days. Unit is of monolithic construction at floor, first stage of wall and baffle with sectional riser to required depth. (Monolithic baffle required, slide-in type is not acceptable)

REINFORCEMENT: Grade 60 reinforced with steel rebar conforming to ASTM A615 on required centers or equal.

C.I. CASTINGS: Manhole frames, covers or grates are manufactured of grey cast iron conforming to ASTM A48-76 Class 30. Manhole shall be nominal 24 inch diameter and be traffic duty.

Engineering Data

The grease interceptor is structurally & hydraulically engineered to conform to UPC/IPC and regional plumbing codes recommended in most cities. Consult with local authorities for specific application requirements.

Shop drawings shall include complete structural & bouyancy calculations certified by a licensed professional engineer upon request.

Consult with Park Equipment Company for exact excavation dimensions & shipping information.

888.611.7275 www.park-usa.com — PARK USA — Design for Water

GREASE INTERCEPTOR SERIES GT
500 THRU 4000 GALLON CAPACITY

SCALE: NONE | DATE: 03/13 | DWG. NO.: GT-1 | REV.: A

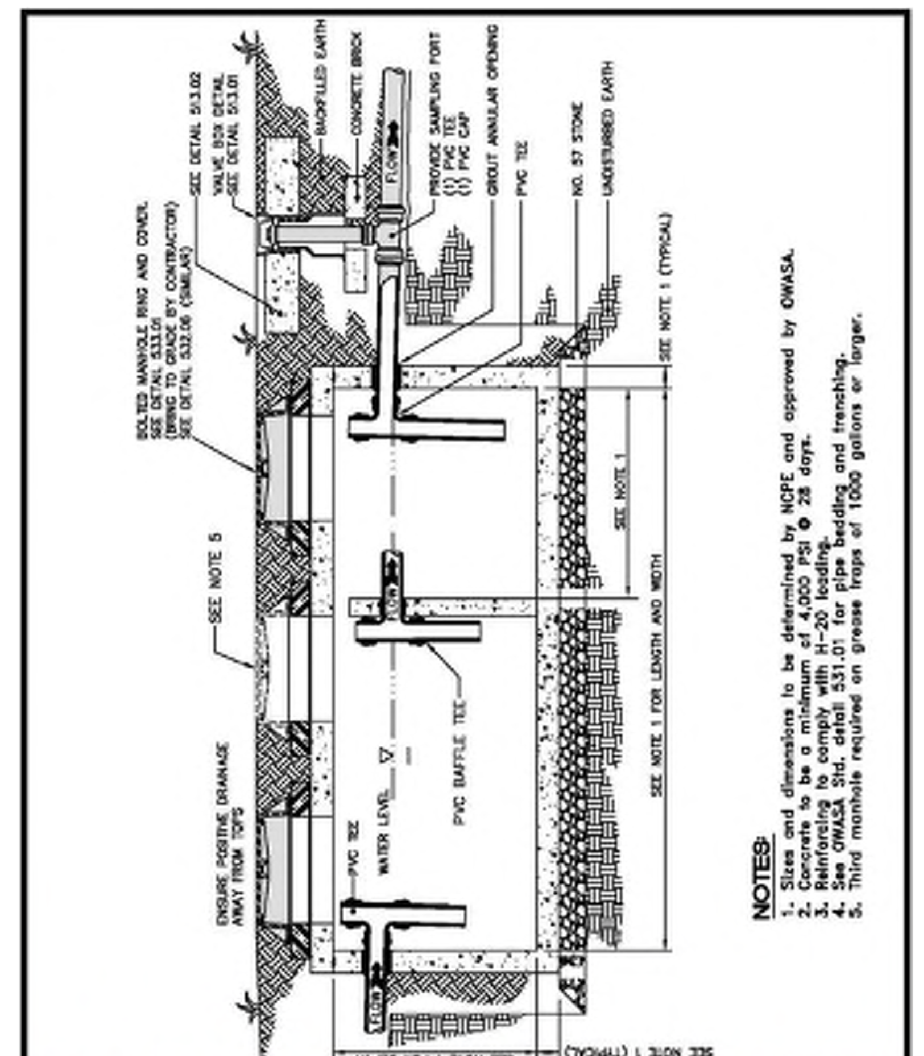

400 Jones Ferry Road, PO Box 366, Carrboro, NC 27510-0366 — ORANGE WATER AND SEWER AUTHORITY — Voice (919) 968-4421, FAX (919) 968-4464, www.owasa.org
USE WITH THE OWASA STANDARD SPECIFICATIONS ONLY

GREASE INTERCEPTOR AND OIL SAND SEPARATOR DETAIL

SCALE: Not To Scale | DETAIL #: 537.01 | REVISION DATE: FEBRUARY 26, 2021 | SHEET #: 1 of 1

U:\Accounts\RKINV\RKINV18001 - Hotel Site Chapel Hill\DESIGN_SHEETS\SANITARY DETAILS.dwg PLOTTED: 6/19/2023 11:38 AM, BY: Jason Thibodeaux PLOTSTYLE: Pennoni NCS.stb PROJECT STATUS: ---

Pennoni — Firm License F-1267
PENNONI ASSOCIATES INC.
5430 Wade Park Boulevard, #106
Raleigh, NC 27607
T 919.929.1173 F 919.493.6548

ALL DIMENSIONS MUST BE VERIFIED BY CONTRACTOR AND OWNER MUST BE NOTIFIED OF ANY DISCREPANCIES BEFORE PROCEEDING WITH WORK

NORTH CAROLINA PROFESSIONAL ENGINEER SEAL 047736 Ethan S Mindrebo — Preliminary

TARHEEL LODGING REDEVELOPMENT PHASE 2
1742 FORDHAM BLVD.
CHAPEL HILL, NC

SANITARY DETAILS

TARHEEL LODGING, LLC & UNICORN GROUP FIFTEEN, LLC
6110 FALCON BRIDDGE ROAD
CHAPEL HILL, NC 27517

DATE	NO.	REVISIONS	BY

ALL DOCUMENTS PREPARED BY PENNONI ASSOCIATES ARE INSTRUMENTS OF SERVICE IN RESPECT OF THE PROJECT. THEY ARE NOT INTENDED OR REPRESENTED TO BE SUITABLE FOR REUSE BY OWNER OR OTHERS ON THE EXTENSIONS OF THE PROJECT OR ON ANY OTHER PROJECT. ANY REUSE WITHOUT WRITTEN VERIFICATION OR ADAPTATION BY PENNONI ASSOCIATES FOR THE SPECIFIC PURPOSE INTENDED WILL BE AT OWNERS SOLE RISK AND WITHOUT LIABILITY OR LEGAL EXPOSURE TO PENNONI ASSOCIATES; AND OWNER SHALL INDEMNIFY AND HOLD HARMLESS PENNONI ASSOCIATES FROM ALL CLAIMS, DAMAGES, LOSSES AND EXPENSES ARISING OUT OF OR RESULTING THEREFROM.

PROJECT	RKINV18001
DATE	2018-05-21
DRAWING SCALE	N.T.S.
DRAWN BY	RLM/CSB
APPROVED BY	ESM

CS6051

1. All Handrails Shall Comply With NC Building Code And Applicable ADA Standards.
2. Handrails Components To Be 1-1/4" Steel Pipe.
3. Powder Coat All Handrails - Silver or Semi-Gloss Black (TBD)
4. Contractor Shall Submit Color Samples For Final Selection.

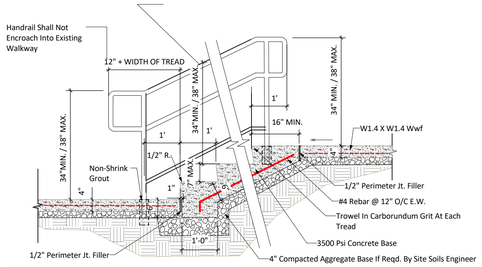

Notes
1. All Stair And Handrail Construction Shall Conform To NC Building Code Standards.
2. Final Number Of Risers Will Vary. See Layout and/or Grading Plans For Exact Elevations And Number Of Risers and Intermediate Landings.
3. Alternate Handrail Design May Be Substituted Provided All Dimensional Standards Conform To NC Building Code As Noted Above.
4. Depressions Around Posts Are Not Allowed.
5. Set Top Of Non-Shrink Grout 3/8" Above Pavement/Step Surface And Taper To Pavement/Step Surface.
6. Handrails Are Required On Both Sides Of Stairs. Maintain 48" Clear Width Unless Noted Otherwise On Site Plan
7. The Full Extent of Removal and Replacement of Exisitng Adjacent Walks is Unknown. Reinforce Subgrade At Connections to Existing Walks to Prevent Differential Settling. Helical Ground Screws, Posts or Soil Reinforcement May Be Required to Insure Adequate Support.

1 SECTION THRU CONCRETE STEPS
1/2" = 1'-0"

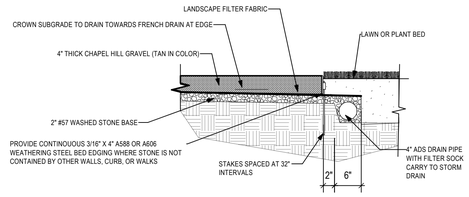

2 SECTION THRU CHAPEL HILL GRAVEL SURFACE
3/4" = 1'-0"

8" Concrete Scoring Band Detail per TCH STand

3 SIDEWALK SCORING PATTERN
nts

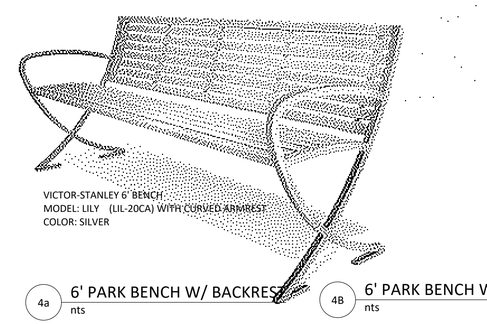

4a 6' PARK BENCH W/ BACKREST
nts

4B 6' PARK BENCH WO/ BACKREST
nts

Manufacturer: SiteScapes-Cambridge CM2-1002-SF
Per TCH Requirements - SS Finish

Provide (1) Waste and (1) Recycle Receptacle Together within 5' of All Benches within ROW, Spaced No More than 200' Apart as Shown on Stretscape Plans. Recycle Receptacle Shall Have Blue Recycle Label Afixed to Top of Receptacle.

5 WASTE & RECYCLE RECEPTACLE
nts

Off-Street Racks May Substitute 1-1/2" Inverted-U Pipe Rack - See Detail 4/C9.2 for Space Layout

Manufacturer: Forms & Surfaces
Per TCH Requirements
Finish: Black

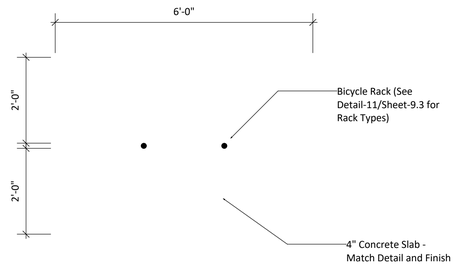

7 Short-Term Bicycle Rack & Layout
Scale: Actual Size

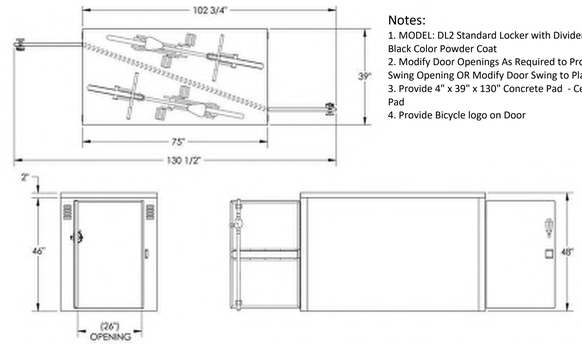

Notes:
1. MODEL: DL2 Standard Locker with Divider Panel Black Color Powder Coat
2. Modify Door Openings As Required to Provide for 180 deg. Swing Opening OR Modify Door Swing to Plan Configuration
3. Provide 4" x 39" x 130" Concrete Pad - Center Locker on Pad
4. Provide Bicycle logo on Door

MODEL: DL2
Standard Locker with Divider Panel
Black Color Powder Coat

www.durabikelocker.com
3790 BRADVIEW DR. - SACRAMENTO, CA 95827
(916) 363-7225 - (800) 722-BIKE (2453)

8 LONG-TERM BICYCLE LOCKER
N.T.S.

6 TERRA CAST PLANTERS - SMALL
nts

TERRA CAST COMMERCIAL PLANTER
Model: Square Footed
Finish : Charcoal
Size: 30" x 30"
info@terracastproducts.com

Note: Round Planters May be Substituted for Square Footed Planters Shown Above

Note: Fill planter bottom with 6" #57 stone. Maintain trees at 15' maximum and thin crown to preserveplanter stability.

REVISIONS

REV	DESCRIPTION	ECN	DATE	APPROVED
X1	PRELIMINARY	- - - -	- - - -	
	FINISH: CHARCOAL			

TerraCast® PRODUCTS
TerraCast® Products, LLC
4400 NW 19th Avenue, Unit K
Pompano Beach, FL 33064
Office: 305-895-9523 x105
Fax: 305-895-7879

SPECS AT A GLANCE

TOP ID: 60"
TOP OD: 54"
BASE ID: 48"
HEIGHT: 40"
VOLUME: 53.23ft³

WEIGHT: 100LBS.

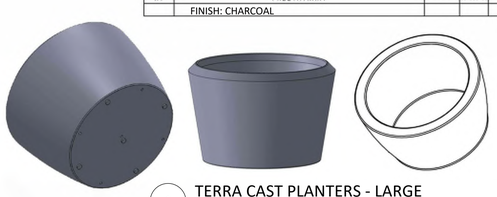

9 TERRA CAST PLANTERS - LARGE
nts

General Notes
1. All Components Shall be Commercial Grade Heavy-Duty and Black in Color
2. 10 GAL Min. Waste Receptacle
3. All Metal Components, Other Than Support Post, Shall be Powder Coated Steel or Aluminum. Support Post Shall be Powder Coated Steel or Galvanized Steel Painted to Match Other Components.
4. Final Equipment Selection May Vary Depending on Tenant Operations and Maintenance Preferences. Consult O&M Staff Before Ordering.

10 DOG WASTE RECEPTACLE
nts

Bocce Ball Rack and Balls by Bocce Masters
www.Boccemasters.com (or equal)

12 BOCCE BALL RACK
nts

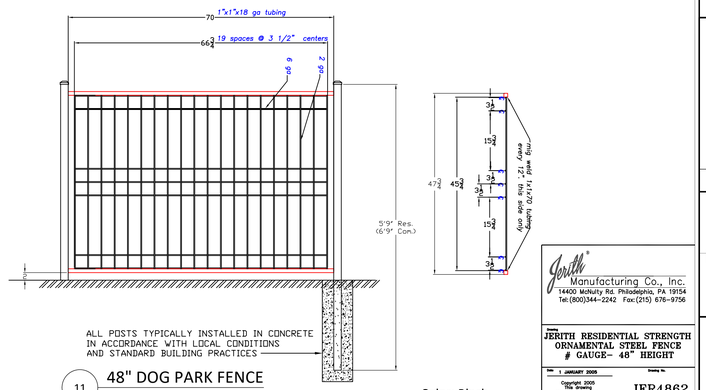

11 48" DOG PARK FENCE
nts

Color: Black

SCOTT MURRAY LAND PLANNING, INC.
Landscape Architecture | Environmental Design | Project Management

Scott Murray Land Planning, Inc.
274 Botetourt Ct. Boydton, VA 23917
252-213-9501 434-689-2925 (fax)
www. stmlandplan.com
smurray@stmlandplan.com

Project:

Tarheel Lodging Redevelopment

Chapel Hill, North Carolina

Developer:

Tarheel Lodging, LLC and Unicorn Group Fifteen, LLC

6110 Falconbridge Rd. ste. 200
Chapel Hill, North Carolina 27517

Sheet Title::

Streetscape Details

No.	Date:	Issue Notes:

Limitations of Use and Liability Disclaimer - This document and all associated documents are provided for a specific site and the named Project only. In no event shall the Client or any third party copy or use any of the concepts, plans, drawings, specifications, designs, or other documents or data, document produced by the Consultant in connection with the Project (the "Instruments of Service") for any purpose other than those noted above or in relation to any project other than the named Project without the prior written permission of the Consultant. Liability arising from the use of these documents is limited to the scope of services fee agreed to in the Project Proposal Scope of Services.

Scale:

Date: August 27, 2019

Drawn By: STM

Drawing No.: na

CS7001

of

NOTES: See also Project Specifications referenced below.

1. UNDERGROUND UTILITY VERIFICATION
Landscape contractor to verify location of underground untilities before beginning work.

2. SOIL PREPARATION
Where existing vegetation remains in areas to be seeded, eradicate existing vegetation by having a licensed spray technician apply an approved herbicide or tilling the weeds into the soil. Good pre-seeding weed control may require spraying two applications of herbicide (at least two weeks apart). Close mowing two weeks prior to spraying is recommended to stimulate weed growth. Herbicide must be applied to vegetative growth in order to kill undesirable plants and their roots. The second application is needed only if the first application is insufficient.

Test soil qualified laboratory tests and amend with lime and fertilizer as needed. Achieve a pH of at least 6.0. Amend soils pursuant to the soils test report and till into the top 18" for all compacted soil areas to be vegetated..

For heavy compacted clay soils - Organic matter must be added in order to prevent the clay from hardening after rain events, to the point where emergent seedlings will be unable to push through the soil surface. Organic matter, such as straw, compost, mulch, leaf litter, etc., must be added in order to increase soil organics to at least 1%. The organics must be worked into the top-most soil prior to planting using a tiller, harrow, disk, or similar implement. Cultivating the top 6" of soil will aid in root development of emergent seedlings, and will allow some percolation of rain water that would otherwise run off the surface with little to no infiltration, likely carrying the seed away with it. Tilling of the top 18" of soil is required for all areas of compacted soil.

If heavy soil conditions are encountered where percolation is not adequate to prevent ponding after a normal rainfall event then the following procedures supersede those illustrated in the accompanying details. Where subgrade does not allow for natural drainage through amendments or subsurface drainage, rootballs shall be set at a depth not to exceed 1/2 of the total rootball depth. Provide additional amendments or drainage as needed to ensure survival of the plant after consulting with landscape architect.

Tracking slopes with mechanized equipment should be done perpendicular to fall line to minimize runoff and erosion.

See Tree Pit Detail for structural soil backfill, tree aeration and stabilization and deep root watering.

3. IRRIGATION
All new plant areas of site as shown on the plans are to be irrigated. Design-Build system design to be submitted to the landscape architect for review and approval prior to installation. Irrigation design shall provide high efficiency drip or spray irrigation to all tree and shrub areas and rotary or spray irrigation to all turf areas. Irrigation design shall incorporate a Root Watering System (RWS) capable of complete deep root watering of root balls. Irrigation Contractor shall be liscensed as required by the State in which the work is to be conducted.

4. PLANT MATERIAL STANDARDS
All plant material and planting standards specified shall meet the minimum standards for nursery stock- ANSIZ60.1-2004 or the County whichever is stricter. Any material with evidence of disease or pest infestations will be rejected. All rework will be at the expense of the Contractor. Substitutions will be permitted only upon prior approval by the Landscape Architect or Owner's Representative. Contractor shall be responsible for furnishing all seed tags and plant tags affirming origin and species. Plant tags shall not be removed prior to final inspection and acceptance. Contractor is responsible for the health of all plant material for a minimum of 30 days following final acceptance. If contractor is awarded a contract for maintenance then he/she shall be responsible for the health and/or replacement of all material as set forth by the maintenance contract.

5. MISCELLANEOUS NOTES - ANNUALS, MULCH & PLACEMENT OF PLANTS
a. Landscape contractor shall submit a schedule of proposed plantings for all annual beds and planters providing for spring and fall plant rotations. Select plants to provide variety and unity. Submittal shall be made to Landscape Architect or Owner's Representative for approval prior to installation.
b. Tree placement and landscape bed layout to be approved by landscape architect prior to installation.
c. All disturbed areas are to be stabilized with lawn, plantings, or mulch. Mulch around all plants as specified. trees shall be mulched with pine straw except within 6' of builings or as prohibited by local ordinances. Double shreaded harwood bark mulch shall be used for all perennials and annual beds. Provide steel or aluminum landscape edging (dark green in color) where liropipe spicata is to be installed adjacent to shrub, turf.or other mulch areas.
d. All turf areas shall be seeded or sodded as noted on plans and as specified below.
e. See LANDSCAPE MAINTENANCE OUTLINE for additional specifications.
f. Plant Quantities shown in the Plant List are included for convenience. Contractor shall be responsible for verifying quantities and providing all plants shown on plan.

6. WARRANTY
All plant material shall be warranted by the Landscape Contractor Installing the material while under his/her care. Alternative arrangements made for the installing contractor to supervise the ongoing maintenance and prescribe corrective actions that are then carried out may extend this warranty period subject to the approval by all parties. Additional warranty details are include in Specifications referenced below.

Note: These plans, details and specifications do not comprise the complete project specifications. See Complete Project Specifications which accompany these plans. The Seeding Specifications noted below are superceded by complete project specifications. Reference Specification Sections noted below:

1. **Final Grading & SoilPreparation 32 9113**
2. **Planting Soils Section 32 9115**
3. **Planting - Section 32 9300**
4. **Turf & Grasses (Sod) Section 32 9200**
5. **Seeding 32 9219**

SEEDING SPECIFICATIONS AND SCHEDULES

Temporary Seeding:
All areas disturbed by construction will be stabilized with temporary seeding immediately following grading. Seeding will comply with the standards and specifications of the latest edition of the Erosion and Sediment Control Regulations for the State or jursidiction in which the project is located. Seeded areas will be maintained in keeping with accepted practices and care.

Permanent Seeding: Level-1 TURF AREAS
August 15th - April 1st
Cool Season Turf Grass - Seed with Kentucky 31 Fescue 100 lbs/ac + 75 lbs/ac Creeping Fescue (Rubra rubra) + Kentucky Bluegrass 10 lbs/ac; straw and tack all newly seeded areas not hydro seeded.
Sod - as noted below
April 1st - May 1st
Cool Season Turf Grass - Seed with Kentucky 31 Fescue 100 lbs/ac + 75 lbs/ac Creeping Fescue (Rubra rubra) + Kentucky Bluegrass 10 lbs/ac; straw and tack all newly seeded areas not hydro seeded.
Sod - as noted below
May 1st - August 15th
Warm Season Turf Grass - Sunsport Improved Bermuda - 3 lbs/1,000 sf
Sod - as noted below

Permanent Seeding Level-2 Areas Low Maintenance Steep (Steep slopes >3:1 H:V) - Seeding Schedule

Seed	Rate
Kentucky 31 Tall Fescue	150 lbs/ac
Creeping Fescue or Redtop (Festuca rubra)	20 lbs/ac
Bermudagrass**	20 lbs/ac
Eragrostis curvula (Schrad.) Nees	2 lbs/ac
Resolute White Clover	20 lbs/ac
Seasonal Nurse Crop*	20 lbs/ac
	232 lbs/ac Total

SOD AREAS
El Toro or Empire Zoysia Sod shall be installed in all areas shown or noted as sod. Contractor shall be responsible for handwatering sod until established where no irrigation is proposed. If planting schedule requires sod placement during formant periods, a hybrid Berumda sod shall be substituted and overseeded with annual rye. Substitute sod variety availability shall be submitted to Landscape Architect for approval.

LANDSCAPE MAINTENANCE OUTLINE
The following outline describes the basic elements of work that will be performed throughout the calendar year:

I. LAWNS - WARM SEASON TURF

A. Mowing
All lawns will be mowed as needed throughout the year in order to maintain a clean, neat appearance. Typically all lawns will be cut at a height of 2" for warm season grasses and 3"- 4" for cool season grasses.

B. Fertilization and Weed Control
February/March: All lawns will be treated with a pre-emergent herbicide for the prevention of annual weed grasses and broadleaf weeds.
March: All lawns will be treated with a high-density fertilizer to promote Spring plant growth and replace nutrients lost due to leaching during the Winter months.
May: All lawns will be treated with a post-emergent herbicide for control of broadleaf weeds and weed grasses, plus a slow-release fertilizer to maintain a healthy turf during the Summer months.
September: All lawns will have a Fall application of fertilizer to replace nutrients lost during the Summer months.
November: All lawns will be treated with a slow-release fertilizer with Iron-Plus to promote Winter hardiness.

C. Insects and Disease Control
All lawn areas will be monitored for infestation of insects or appearance of turf diseases. Due to the unpredictable nature of these problems, treatments will be performed on an "as needed" basis to prevent and control infestations. All insecticides/ fungicides will be applied under the supervision of a Certified Pesticide Applicator. Vertebrate pests such as deer, beaver, vols, and moles shall be monitored and reported to property manager when occurances are noted.

II. EDGING

A. Lawns
All curbs and sidewalks will be edged, as needed, throughout the year in order to maintain a clean cut, crisp edge.

B. Shrub Beds
All bed lines will be edge cut once a year.

III. PLANTING

A. Weed Control
March: all bed areas will be treated with a pre-emergent herbicide to control weed seed germination (Ex. Barricade, Snapshot, pendulum)

When needed, all beds will be treated with the selective post-emergent herbicide, (Ex. Finale, Roundup, Reward,) to control weed seeds, which have germinated.

Additional hand weeding and selective spraying of herbicides such as ROUND-UP will be performed as needed

All applications will be applied under the supervision of a licensed Certified Pesticide Applicator.

B. Fertilization
All evergreen shrub beds will be fertilized in the early Spring according to soil test results and plant /fertilizer recommendations.

All blooming trees and shrubs (i.e., azalea, rhododendron, dogwoods, redbud) will be fertilized with a complete analysis fertilizer 4 to 5 weeks after blooming.

Deciduous trees and shrubs except blooming species will be fertilized with a complete slow release fertilizer in the early Spring and two additional times during the growing season.

C. Pruning
All plantings will be pruned at the appropriate time of the year according to type / species. For example, Spring blooming trees and shrubs will be pruned after flowering while Summer blooming species will be pruned in Winter or early Spring

D. Insect and Disease Control
All plantings will be monitored for infestation of insect or appearance of disease. Once identified, chemical treatments will be applied. All applications will be performed under the supervision of a licensed Certified Pesticide Applicator.

IV. CLEAN-UP

A. Grounds
All grounds will be policed on a bi-weekly basis.

Major damage due to high winds, ice, snow, or other unpredictable acts of nature is not included but shall be offered on an hourly basis. Contractor shall provide property manager with hourly rates for labor and equipment at the time of contract acceptance/renewal.

Leaf clean-up of walks, turf areas, shrub beds and other high visibility areas is to be provided weekly. Leaf cleanup in out lying natural areas is to be provided twice per year in the fall.

V. IRRIGATION (if provided)
All Irrigation will be monitored on a weekly basis to insure coverage per the irrigation design. Repairs made as needed. Cost for repairs shall be specified in Landscape Contract. Provisions shall be made to draindown in the fall to insure against freezing.

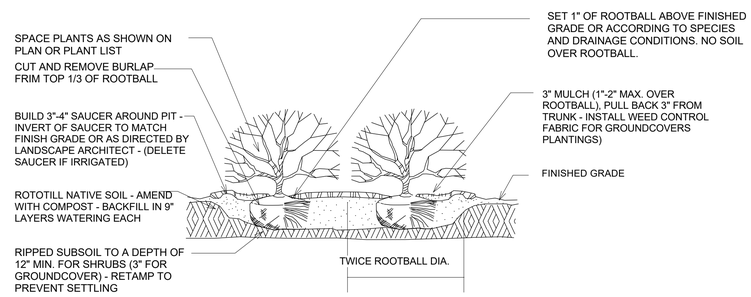

3 LA-1.1 SHRUB PLANTING AND GROUNDCOVER PLANTINGS
N.T.S.

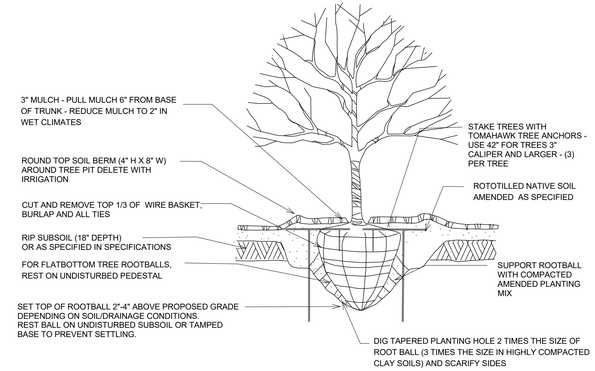

1 LA-1.1 TREE PLANTING
N.T.S.

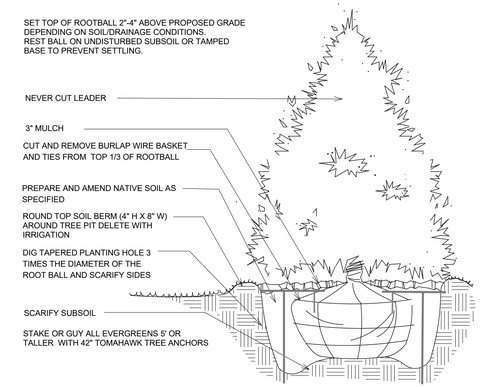

2 LA-1.1 EVERGREEN TREE PLANTING
N.T.S.

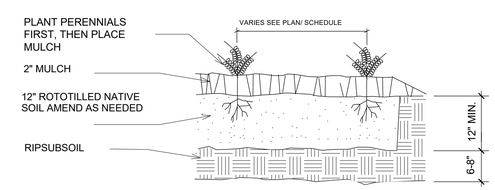

4 LA-1.1 PERENNIAL PLANTING
N.T.S.

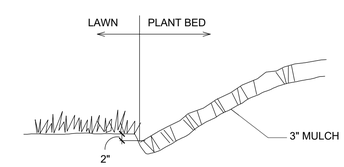

NOTE: PINE STRAW MULCH MAY BE PROHIBITED WITHIN CLOSE PROXIMITIES OF BUILDINGS IN CERTAIN JURISDICTIONS. CONSULT CURRENT LOCAL ORDINANCES.

5 LA-1.1 MULCH EDGE
N.T.S.

Note:
All Tree placements conform to the
NCDOT Guidelines for Planting Within Highway Right-of-Way.

SCOTT MURRAY LAND PLANNING, INC.
Landscape Architecture | Environmental Design | Project Management

Scott Murray Land Planning, Inc.
274 Botetourt Ct. Boydton, VA 23917
252-213-9501 434-689-2925 (fax)
www. stmlandplan.com
smurray@stmlandplan.com

Project:

Tarheel Lodging Redevelopment
Chapel Hill, North Carolina

Developer:

Tarheel Lodging, LLC
and
Unicorn Group Fifteen, LLC

6110 Falconbridge Rd. ste. 200
Chapel Hill, North Carolina 27517

Sheet Title::

Planting Details and Maintenance Plan

No.	Date:	Issue Notes:

Limitations of Use and Liability Disclaimer - This document and all associated documents are provided for a specific site and the named Project only. In no event shall the Client or any third party copy or use any of the concepts, plans, drawings, specifications, designs, or other documents or data, document produced by the Consultant in connection with the Project (the "Instruments of Service") for any purpose other than those noted above or in relation to any project other than the named Project without the prior written permission of the Consultant. Liability arising from the use of these documents is limited to the scope of services fee agreed to in the Project Proposal Scope of Services.

Scale:

Date: August 27, 2019

Drawn By: STM

Drawing No.: na

CS7101

of

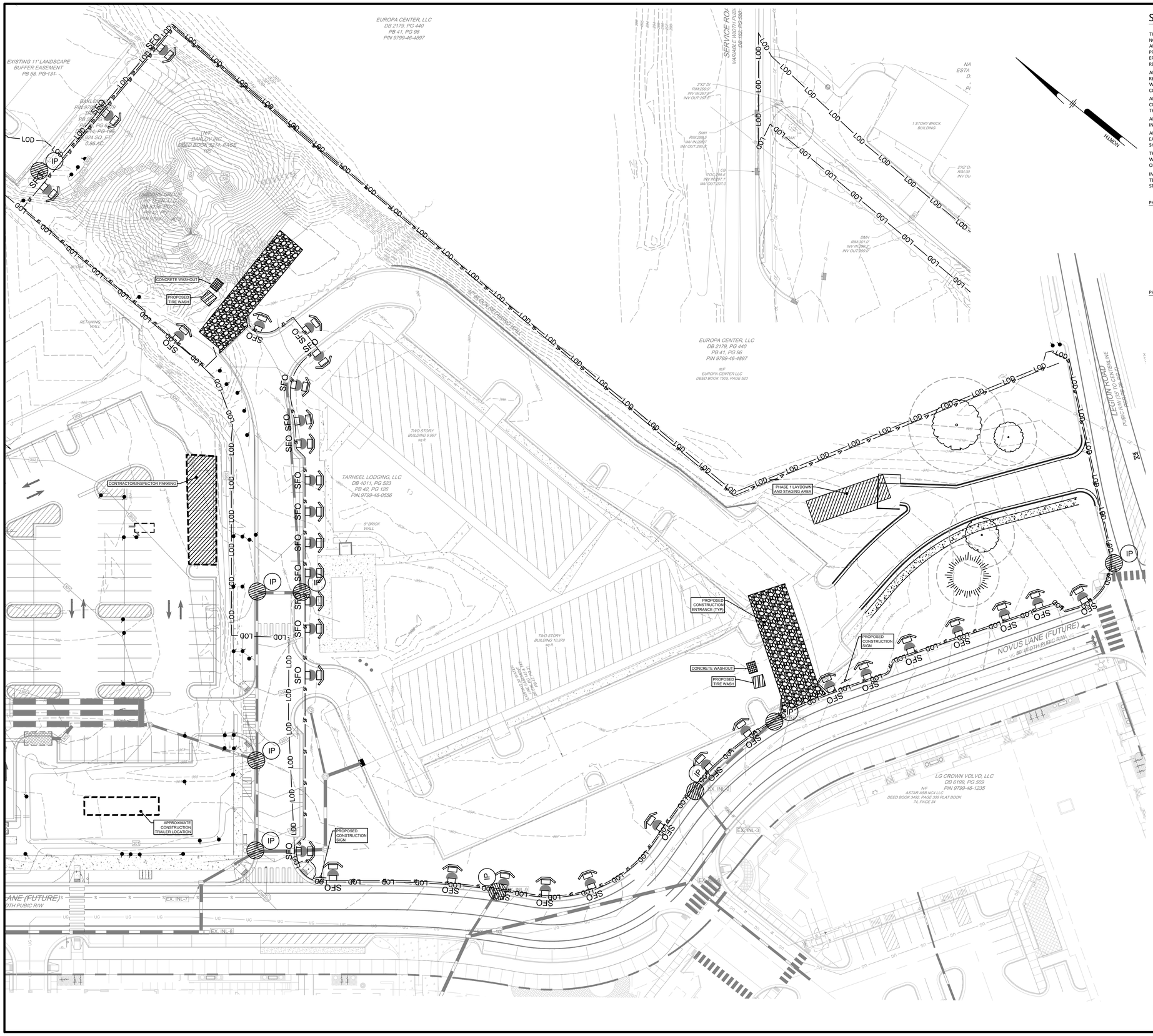

SEQUENCE OF CONSTRUCTION:

THE TOWN OF CHAPEL HILL AND ORANGE COUNTY PLANNING & INSPECTION DEPARTMENT MUST BE NOTIFIED TO SCHEDULE A PRE-CONSTRUCTION MEETING PRIOR TO ANY EARTHMOVING ACTIVITY. OBTAIN ALL NECESSARY PLAN APPROVALS AND PERMITS PRIOR TO COMMENCING WORK. HOLD A PRE-CONSTRUCTION CONFERENCE WITH THE ENGINEER, OWNER'S REPRESENTATION, ORANGE COUNTY EROSION CONTROL OFFICER (919-245-2588), THE TOWN OF CHAPEL HILL, THE CONTRACTOR AND REPRESENTATIVES FROM ANY OTHER APPLICABLE REGULATORY AGENCIES.

AFTER EACH RUNOFF EVENT, ALL TEMPORARY EROSION CONTROL FACILITIES SHALL BE CLEANED. ALL SILT REMOVED DURING THE CLEANING OPERATIONS SHALL BE INCORPORATED INTO THE EARTHWORK FILL OR WASTED ON THE SITE AS DIRECTED BY THE OWNER OR THEIR REPRESENTATIVE. EACH TASK MUST BE COMPLETED AND STABILIZED PRIOR TO COMMENCING THE NEXT TASK UNLESS NOTED.

ALL INGRESS TO AND EGRESS FROM THE SITE DURING CONSTRUCTION SHALL BE LIMITED TO THE CONSTRUCTION ENTRANCES FOR EACH AREA AS NOTED ON THE PLANS. IF ADDITIONAL POINTS OF ACCESS TO THE CONSTRUCTION SITE ARE REQUIRED, A TIRE CLEANING FACILITY MUST BE INSTALLED AND MAINTAINED.

ANY BMPs THAT ARE DISTURBED DURING CONSTRUCTION, AND PROPOSED GRADING OR UTILITY INSTALLATIONS SHOULD BE IMMEDIATELY REPAIRED AND RESTABILIZED.

ALL EARTH DISTURBANCE ACTIVITIES SHALL PROCEED IN ACCORDANCE WITH THE FOLLOWING SEQUENCE. EACH STAGE SHALL BE COMPLETED BEFORE ANY FOLLOWING STAGE IS INITIATED. CLEARING AND GRUBBING SHALL BE LIMITED TO ONLY THOSE AREAS DESCRIBED IN EACH STAGE.

THE OPERATOR SHALL REMOVE FROM THE SITE, RECYCLE OR DISPOSE OF ALL BUILDING MATERIALS AND WASTES IN ACCORDANCE WITH THE ORANGE COUNTY SOLID WASTE REGULATED RECYCLABLE MATERIALS ORDINANCE.

IMMEDIATELY FOLLOWING THE COMPLETION OF THE MOST RECENT LAND DISTURBING/GRADING ACTIVITY, TEMPORARILY STABILIZE THROUGHOUT CONSTRUCTION ANY DISTURBED AREAS, INCLUDING MATERIAL STOCKPILES THAT ARE SCHEDULED OR LIKELY TO REMAIN INACTIVE FOR 7 DAYS OR MORE.

PHASE 2A-1 CONSTRUCTION SEQUENCE

1. PRIOR TO GENERAL DEMOLITION ACTIVITIES, INSTALL STABILIZED CONSTRUCTION ENTRANCE AND CONSTRUCTION STAGING AREA. BEGIN INSTALLATION OF CONSTRUCTION SIGNAGE; PERIMETER CONSTRUCTION FENCING, SILT FENCE, SILT FENCE OUTLETS, AND TREE PROTECTION. INSTALL ALL INLET PROTECTION FACILITIES AS SHOWN ON THE PLAN.
2. PERFORM UTILITY LOCATION AND EXCAVATE ALL TEST PITS. ALL EXISTING UTILITIES MUST BE LOCATED PRIOR TO COMMENCING ANY EARTH-MOVING ACTIVITIES.
3. BEGIN DEMOLITION OF EXISTING BUILDING AND STRUCTURES THAT ARE TO BE REMOVED. EXISTING UTILITIES THAT ARE NOT INTENDED FOR CONTINUED USE SHOULD EITHER BE REMOVED OR CAPPED AND ABANDONED IN PLACE IN ACCORDANCE WITH THE DIRECTIONS OF THE APPROPRIATE UTILITY COMPANY AND AS SHOWN ON THE DEMOLITION PLAN.
4. ONCE ALL BUILDINGS AND UTILITIES HAVE BEEN REMOVED AND/OR DEMOLISHED; PROCEED TO PHASE 2A-2.

PHASE 2A-2 CONSTRUCTION SEQUENCE

1. PRIOR TO ANY MAJOR EARTH-MOVING ACTIVITIES, FINISH ROAD A CONNECTION TO THE NORTH. THIS WORK SHALL INCLUDE ROUGH GRADING AND INSTALLATION OF STORMWATER STRUCTURES AND PIPING WORKING FROM DOWNSTREAM TO UPSTREAM INCLUDING INLETS AND STORMWATER MANHOLES, SANITARY SEWER PIPES AND STRUCTURES INCLUDING THE CONNECTION TO EXISTING SANITARY MANHOLE. INSTALLATION OF CONCRETE CURBING, DRIVEWAY PAVEMENT STRUCTURE (EXCLUDING FINAL SURFACE). CONCURRENT WITH STREET A CONSTRUCTION, BEGIN EARTHWORK NECESSARY FOR THE ERECTION OF THE BUILDING 3/4 GARAGE. ERECTION OF THE GARAGE.
2. BEGIN STRIPPING SITE OF THE EXISTING PAVEMENT AND SUBBASE MATERIAL (STOCKPILING IF MATERIAL IS TO BE REUSED). BEGIN ROUGH GRADING OF FUTURE PHASE PAVEMENT AND LANDSCAPE AREAS SUBBASE ELEVATIONS. ALL CUT AREAS SHALL BE ROTATED INTO FILL AREAS ON THE SITE. THIS WORK SHALL INCLUDE ROUGH GRADING OF THE BUILDING PAD AREA. STABILIZE SITE ONCE ROUGH GRADING IS COMPLETED, INCLUDING BUT NOT LIMITED TO STONE SUBBASE MATERIAL AND TEMPORARY STABILIZATION OF LANDSCAPE AREAS (SEE TEMPORARY STABILIZATION NOTES).
3. INITIATE EARTHWORK NECESSARY TO REACH FINAL GRADES INDICATED ON THE PLANS. BEGIN INSTALLATION OF STORM SEWER INLETS AND PIPING AS GRADING ALLOWS. INSTALLATION OF STORM SEWER SHALL BE FROM DOWNSTREAM TO UPSTREAM AS SHOWN ON THE PLAN. UPON COMPLETION OF THE INLET AND DOWNSTREAM PIPING INSTALLATION, IMMEDIATELY INSTALL TEMPORARY INLET PROTECTION FACILITIES WITHIN EACH INLET. BEGIN INSTALLATION OF SANITARY SEWER MANHOLES AND PIPING. INSTALLATON OF SANITARY SEWER SYSTEM SHALL BE FROM DOWNSTREAM TO UPSTREAM. BEGIN INSTALLATION OF WATER MAIN, HYDRANTS, AND SERVICE LINES AS SHOWN ON THE PLAN.
4. UPON COMPLETION OF UTILITIES, CONSTRUCT CURBS AND IMMEDIATELY STABILIZE THE AREAS TO BE PAVED WITH STONE SUBBASE AND THE TURF AREAS WITH EROSION CONTROL BLANKET AS APPROPRIATE. INSTALL SIDEWALKS FOLLOWED BY INSTALLATION OF VEGETATION INCLUDING ALL LANDCAPING AND GRASSED AREAS.
5. PRIOR TO PLACEMENT OF THE FINAL PAVEMENT WEARING COURSE, ALL OTHER CONSTRUCTION MUST BE COMPLETED INCLUDING BUILDINGS, DRIVEWAYS, LANDSCAPING, GRADING AND CONCRETE WORK. UPON COMPLETION, INSTALL FINAL WEARING COURSE, SIGNAGE AND STRIPING.
6. CLEAR SITE OF ALL DEBRIS AND ALL UNWANTED MATERIALS. DISPOSAL SHALL BE IN A SAFE AND LAWFUL MANNER.
7. WHEN PERMANENT STABILIZATION OF A UNIFORM 70% PERENNIAL VEGETATIVE COVER OR OTHER PERMANENT NON-VEGETATIVE COVER WITH A DENSITY SUFFICIENT TO RESIST ACCELERATED EROSION HAS BEEN ACHIEVED AND THE INSPECTOR HAS ACCEPTED THE STABILIZATION, REMOVE ALL REMAINING TEMPORARY EROSION CONTROL FACILITIES INCLUDING SILT FENCING, INLET PROTECTION DEVICES, CONSTRUCTION ENTRANCES AND SILT FENCE OUTLETS. AREAS DISTURBED DURING REMOVAL OF THE TEMPORARY BMP FACILITIES SHALL BE IMMEDIATELY STABILIZED. UNSEAL FILTERRA UNITS AND DEMOBILIZE.

EROSION LEGEND

SYMBOL	DESCRIPTION
LOD	PROPOSED LIMIT OF DISTURBANCE
SF	PROPOSED SILT FENCE
	PROPOSED CONCRETE WASH OUT
	PROPOSED SILT FENCE OUTLET
IP	PROPOSED INLET PROTECTION
SFO	PROPOSED MODIFIED SILT FENCE OUTLET

LIMITS OF DISTURBANCE: 4.252 AC (185,202 SF)

0 30' 60'

NOT FOR CONSTRUCTION

Pennoni
Firm License F-1267
PENNONI ASSOCIATES INC.
5430 Wade Park Boulevard
Suite 106
Raleigh, NC 27607
T 919.929.1173 F 919.493.6548

ALL DIMENSIONS MUST BE VERIFIED BY CONTRACTOR AND OWNER MUST BE NOTIFIED OF ANY DISCREPANCIES BEFORE PROCEEDING WITH WORK

NORTH CAROLINA PROFESSIONAL SEAL 047736 ENGINEER Eman S Mindrebo

Preliminary

TARHEEL LODGING REDEVELOPMENT PHASE 2

1742 FORDHAM BLVD.
CHAPEL HILL, NC

EROSION AND SEDIMENT CONTROL PLAN
PHASE 2A-1

TARHEEL LODGING, LLC & UNICORN GROUP FIFTEEN, LLC
6110 FALCON BRIDGE ROAD
CHAPEL HILL, NC 27517

NO.	REVISIONS	BY
23	PHASE 2 MODIFICATIONS	DTR

DATE
04/28/2023

ALL DOCUMENTS PREPARED BY PENNONI ASSOCIATES ARE INSTRUMENTS OF SERVICE IN RESPECT OF THE PROJECT. THEY ARE NOT INTENDED OR REPRESENTED TO BE SUITABLE FOR REUSE BY OWNER OR OTHERS ON THE EXTENSIONS OF THE PROJECT OR ON ANY OTHER PROJECT. ANY REUSE WITHOUT WRITTEN VERIFICATION OR ADAPTATION BY PENNONI ASSOCIATES FOR THE SPECIFIC PURPOSE INTENDED WILL BE AT OWNERS SOLE RISK AND WITHOUT LIABILITY OR LEGAL EXPOSURE TO PENNONI ASSOCIATES; AND OWNER SHALL INDEMNIFY AND HOLD HARMLESS PENNONI ASSOCIATES FROM ALL CLAIMS, DAMAGES, LOSSES AND EXPENSES ARISING OUT OF OR RESULTING THEREFROM.

PROJECT	RKINV18001
DATE	2018/05/23
DRAWING SCALE	AS SHOWN
DRAWN BY	DTR
APPROVED BY	ESM

CS8001

SHEET 35 OF 39

U:\Accounts\RKINV\RKINV18001 - Hodel Site Chapel Hill\DESIGN_SHEETSCS\8001.dwg PLOTTED: 6/16/2023 11:39 AM, BY: Jason Thibodeaux PLOTSTYLE: Pennoni NCS.ctb PROJECT STATUS: ---

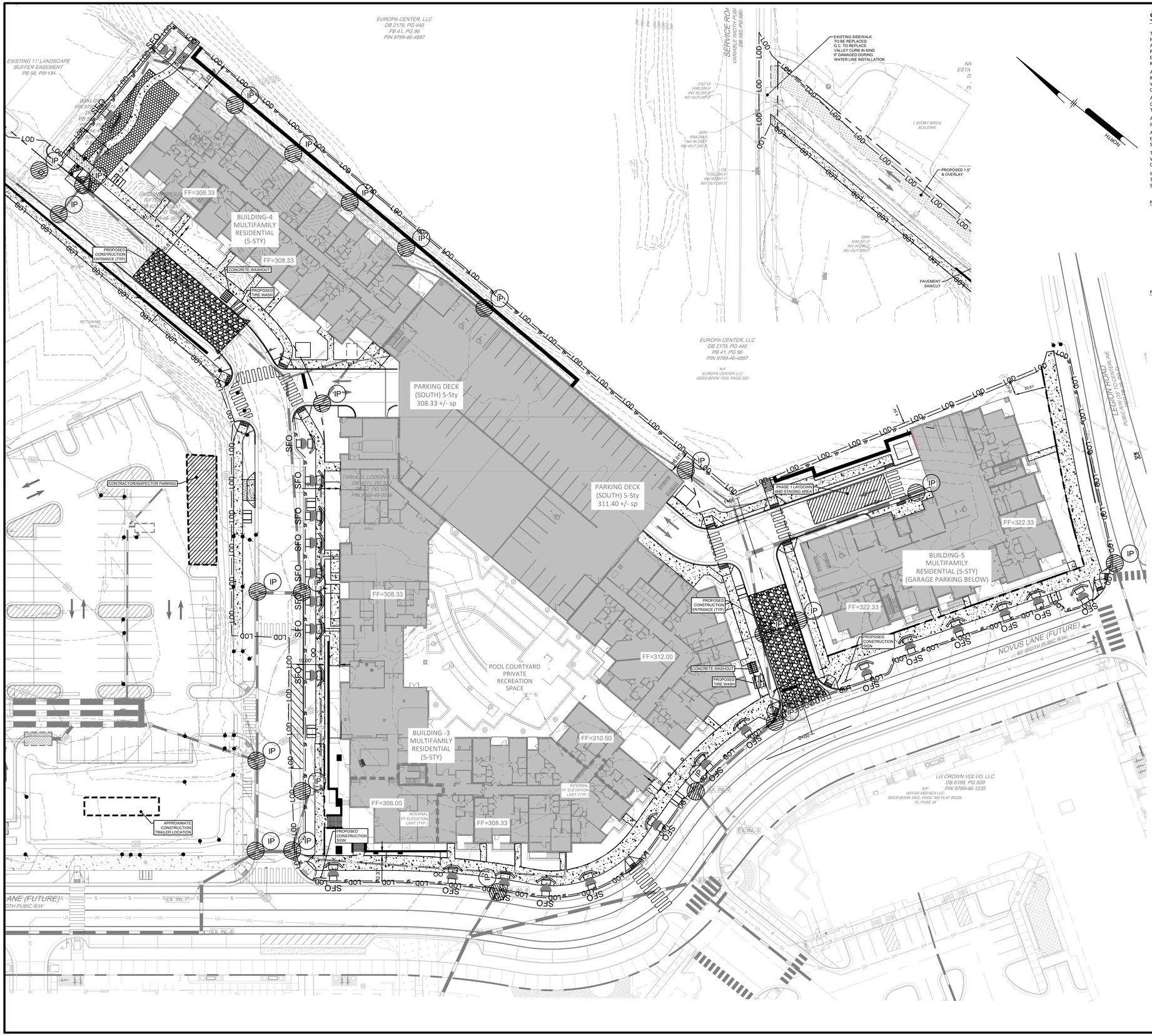

SEQUENCE OF CONSTRUCTION:

THE TOWN OF CHAPEL HILL AND ORANGE COUNTY PLANNING & INSPECTION DEPARTMENT MUST BE NOTIFIED TO SCHEDULE A PRE-CONSTRUCTION MEETING PRIOR TO ANY EARTHMOVING ACTIVITY. OBTAIN ALL NECESSARY PLAN APPROVALS AND PERMITS PRIOR TO COMMENCING WORK. HOLD A PRE-CONSTRUCTION CONFERENCE WITH THE ENGINEER, OWNER'S REPRESENTATION, ORANGE COUNTY EROSION CONTROL OFFICER (919-245-2588), THE TOWN OF CHAPEL HILL, THE CONTRACTOR AND REPRESENTATIVES FROM ANY OTHER APPLICABLE REGULATORY AGENCIES.

AFTER EACH RUNOFF EVENT, ALL TEMPORARY EROSION CONTROL FACILITIES SHALL BE CLEANED. ALL SILT REMOVED DURING THE CLEANING OPERATIONS SHALL BE INCORPORATED INTO THE EARTHWORK FILL OR WASTED ON THE SITE AS DIRECTED BY THE OWNER OR THEIR REPRESENTATIVE. EACH TASK MUST BE COMPLETED AND STABILIZED PRIOR TO COMMENCING THE NEXT TASK UNLESS NOTED.

ALL INGRESS TO AND EGRESS FROM THE SITE DURING CONSTRUCTION SHALL BE LIMITED TO THE CONSTRUCTION ENTRANCES FOR EACH AREA AS NOTED ON THE PLANS. IF ADDITIONAL POINTS OF ACCESS TO THE CONSTRUCTION SITE ARE REQUIRED, A TIRE CLEANING FACILITY MUST BE INSTALLED AND MAINTAINED.

ANY BMPs THAT ARE DISTURBED DURING CONSTRUCTION, AND PROPOSED GRADING OR UTILITY INSTALLATIONS SHOULD BE IMMEDIATELY REPAIRED AND RESTABILIZED.

ALL EARTH DISTURBANCE ACTIVITIES SHALL PROCEED IN ACCORDANCE WITH THE FOLLOWING SEQUENCE. EACH STAGE SHALL BE COMPLETED BEFORE ANY FOLLOWING STAGE IS INITIATED. CLEARING AND GRUBBING SHALL BE LIMITED TO ONLY THOSE AREAS DESCRIBED IN EACH STAGE.

THE OPERATOR SHALL REMOVE FROM THE SITE, RECYCLE OR DISPOSE OF ALL BUILDING MATERIALS AND WASTES IN ACCORDANCE WITH THE ORANGE COUNTY SOLID WASTE REGULATED RECYCLABLE MATERIALS ORDINANCE.

IMMEDIATELY FOLLOWING THE COMPLETION OF THE MOST RECENT LAND DISTURBING/GRADING ACTIVITY, TEMPORARILY STABILIZE THROUGHOUT CONSTRUCTION ANY DISTURBED AREAS, INCLUDING MATERIAL STOCKPILES THAT ARE SCHEDULED OR LIKELY TO REMAIN INACTIVE FOR 7 DAYS OR MORE.

PHASE 2A-1 CONSTRUCTION SEQUENCE

1. PRIOR TO GENERAL DEMOLITION ACTIVITIES, INSTALL STABILIZED CONSTRUCTION ENTRANCE AND CONSTRUCTION STAGING AREA. BEGIN INSTALLATION OF CONSTRUCTION SIGNAGE; PERIMETER CONSTRUCTION FENCING, SILT FENCE, SILT FENCE OUTLETS, AND TREE PROTECTION. INSTALL ALL INLET PROTECTION FACILITIES AS SHOWN ON THE PLAN.
2. PERFORM UTILITY LOCATION AND EXCAVATE ALL TEST PITS. ALL EXISTING UTILITIES MUST BE LOCATED PRIOR TO COMMENCING ANY EARTH-MOVING ACTIVITIES.
3. BEGIN DEMOLITION OF EXISTING BUILDING AND STRUCTURES THAT ARE TO BE REMOVED. EXISTING UTILITIES THAT ARE NOT INTENDED FOR CONTINUED USE SHOULD EITHER BE REMOVED OR CAPPED AND ABANDONED IN PLACE IN ACCORDANCE WITH THE DIRECTIONS OF THE APPROPRIATE UTILITY COMPANY AND AS SHOWN ON THE DEMOLITION PLAN.
4. ONCE ALL BUILDINGS AND UTILITIES HAVE BEEN REMOVED AND/OR DEMOLISHED; PROCEED TO PHASE 2A-2.

PHASE 2A-2 CONSTRUCTION SEQUENCE

1. PRIOR TO ANY MAJOR EARTH-MOVING ACTIVITIES, FINISH ROAD A CONNECTION TO THE NORTH. THIS WORK SHALL INCLUDE ROUGH GRADING AND INSTALLATION OF STORMWATER STRUCTURES AND PIPING WORKING FROM DOWNSTREAM TO UPSTREAM INCLUDING INLETS AND STORMWATER MANHOLES, SANITARY SEWER PIPES AND STRUCTURES INCLUDING THE CONNECTION TO EXISTING SANITARY MANHOLE. INSTALLATION OF CONCRETE CURBING, DRIVEWAY PAVEMENT STRUCTURE (EXCLUDING FINAL SURFACE). CONCURRENT WITH STREET A CONSTRUCTION, BEGIN EARTHWORK NECESSARY FOR THE ERECTION OF THE BUILDING 3/4 GARAGE. ERECTION OF THE GARAGE.
2. BEGIN STRIPPING SITE OF THE EXISTING PAVEMENT AND SUBBASE MATERIAL (STOCKPILING IF MATERIAL IS TO BE REUSED). BEGIN ROUGH GRADING OF FUTURE PHASE PAVEMENT AND LANDSCAPE AREAS SUBBASE ELEVATIONS. ALL CUT AREAS SHALL BE ROTATED INTO FILL AREAS ON THE SITE. THIS WORK SHALL INCLUDE ROUGH GRADING OF THE BUILDING PAD AREA. STABILIZE SITE ONCE ROUGH GRADING IS COMPLETED, INCLUDING BUT NOT LIMITED TO STONE SUBBASE MATERIAL AND TEMPORARY STABILIZATION OF LANDSCAPE AREAS (SEE TEMPORARY STABILIZATION NOTES).
3. INITIATE EARTHWORK NECESSARY TO REACH FINAL GRADES INDICATED ON THE PLANS. BEGIN INSTALLATION OF STORM SEWER INLETS AND PIPING AS GRADING ALLOWS. INSTALLATION OF STORM SEWER SHALL BE FROM DOWNSTREAM TO UPSTREAM AS SHOWN ON THE PLAN. UPON COMPLETION OF THE INLET AND DOWNSTREAM PIPING INSTALLATION, IMMEDIATELY INSTALL TEMPORARY INLET PROTECTION FACILITIES WITHIN EACH INLET. BEGIN INSTALLATION OF SANITARY SEWER MANHOLES AND PIPING. INSTALLATON OF SANITARY SEWER SYSTEM SHALL BE FROM DOWNSTREAM TO UPSTREAM. BEGIN INSTALLATION OF WATER MAIN, HYDRANTS, AND SERVICE LINES AS SHOWN ON THE PLAN.
4. UPON COMPLETION OF UTILITIES, CONSTRUCT CURBS AND IMMEDIATELY STABILIZE THE AREAS TO BE PAVED WITH STONE SUBBASE AND THE TURF AREAS WITH EROSION CONTROL BLANKET AS APPROPRIATE. INSTALL SIDEWALKS FOLLOWED BY INSTALLATION OF VEGETATION INCLUDING ALL LANDCAPING AND GRASSED AREAS.
5. PRIOR TO PLACEMENT OF THE FINAL PAVEMENT WEARING COURSE, ALL OTHER CONSTRUCTION MUST BE COMPLETED INCLUDING BUILDINGS, DRIVEWAYS, LANDSCAPING, GRADING AND CONCRETE WORK. UPON COMPLETION, INSTALL FINAL WEARING COURSE, SIGNAGE AND STRIPING.
6. CLEAR SITE OF ALL DEBRIS AND ALL UNWANTED MATERIALS. DISPOSAL SHALL BE IN A SAFE AND LAWFUL MANNER.
7. WHEN PERMANENT STABILIZATION OF A UNIFORM 70% PERENNIAL VEGETATIVE COVER OR OTHER PERMANENT NON-VEGETATIVE COVER WITH A DENSITY SUFFICIENT TO RESIST ACCELERATED EROSION HAS BEEN ACHIEVED AND THE INSPECTOR HAS ACCEPTED THE STABILIZATION, REMOVE ALL REMAINING TEMPORARY EROSION CONTROL FACILITIES INCLUDING SILT FENCING, INLET PROTECTION DEVICES, CONSTRUCTION ENTRANCES AND SILT FENCE OUTLETS. AREAS DISTURBED DURING REMOVAL OF THE TEMPORARY BMP FACILITIES SHALL BE IMMEDIATELY STABILIZED. UNSEAL FILTERRA UNITS AND DEMOBILIZE.

EROSION LEGEND

SYMBOL	DESCRIPTION
LOD	PROPOSED LIMIT OF DISTURBANCE
SF	PROPOSED SILT FENCE
	PROPOSED CONCRETE WASH OUT
	PROPOSED SILT FENCE OUTLET
IP	PROPOSED INLET PROTECTION
SFO	PROPOSED MODIFIED SILT FENCE OUTLET

LIMITS OF DISTURBANCE: 4.252 AC (185,202 SF)

0 30' 60'

NOT FOR CONSTRUCTION

Pennoni
Firm License F-1267
PENNONI ASSOCIATES INC.
5430 Wade Park Boulevard
Suite 106
Raleigh, NC 27607
T 919.929.1173 F 919.493.6548

ALL DIMENSIONS MUST BE VERIFIED BY CONTRACTOR AND OWNER MUST BE NOTIFIED OF ANY DISCREPANCIES BEFORE PROCEEDING WITH WORK

NORTH CAROLINA PROFESSIONAL SEAL 047736 ENGINEER Eman S Mindrado

Preliminary

TARHEEL LODGING REDEVELOPMENT PHASE 2

1742 FORDHAM BLVD.
CHAPEL HILL, NC

EROSION AND SEDIMENT CONTROL PLAN
PHASE 2A-2

TARHEEL LODGING, LLC & UNICORN GROUP FIFTEEN, LLC
6110 FALCON BRIDGE ROAD
CHAPEL HILL, NC 27517

NO.	DATE	REVISIONS	BY
23	04/28/2023	PHASE 2 MODIFICATIONS	DTR

ALL DOCUMENTS PREPARED BY PENNONI ASSOCIATES ARE INSTRUMENTS OF SERVICE IN RESPECT OF THE PROJECT. THEY ARE NOT INTENDED OR REPRESENTED TO BE SUITABLE FOR REUSE BY OWNER OR OTHERS ON THE EXTENSIONS OF THE PROJECT OR ON ANY OTHER PROJECT. ANY REUSE WITHOUT WRITTEN VERIFICATION OR ADAPTATION BY PENNONI ASSOCIATES FOR THE SPECIFIC PURPOSE INTENDED WILL BE AT OWNERS SOLE RISK AND WITHOUT LIABILITY OR LEGAL EXPOSURE TO PENNONI ASSOCIATES; AND OWNER SHALL INDEMNIFY AND HOLD HARMLESS PENNONI ASSOCIATES FROM ALL CLAIMS, DAMAGES, LOSSES AND EXPENSES ARISING OUT OF OR RESULTING THEREFROM.

PROJECT	RKINV18001
DATE	04/26/2023
DRAWING SCALE	1" = 40'
DRAWN BY	DTR
APPROVED BY	ESM

CS8002

SHEET 36 OF 39

U:\Accounts\RKINV\RKINV18001 - Hotel Site Chapel Hill\DESIGN_SHEETS\CS8002.dwg PLOTTED: 6/19/2023 11:39 AM, BY: Jason Thibodeaux PLOTSTYLE: Pennoni NCS.ctb PROJECT STATUS: ---

NOTES:

1. ALL ON-SITE TOPSOIL MUST BE PRESERVED FOR REUSE ON THE SITE DURING REVEGETATION, UNLESS IT IS INFEASIBLE OR UNREASONABLE TO DO SO. (NOTE: TOPSOIL STOCKPILING ON-SITE MAY BE INFEASIBLE IF SPACE IS NOT AVAILABLE ON-SITE FOR TOPSOIL STOCKPILING OR IF LITTLE TO NO VEGETATION IS TO REMAIN UNDER POST-CONSTRUCTION CONDITIONS.).
2. ALL SOIL STOCKPILES MUST BE STABILIZED TO PREVENT EROSION AND FUGITIVE DUST. THE SURFACE OF THE STOCKPILE MUST BE PROPERLY PROTECTED TO ELIMINATE THE RISK OF EROSION. SEE TEMPORARY SEEDING OR STABILIZATION DETAIL. SUITABLE ALTERNATIVE MEANS OF STABILIZATION CAN BE USED, SUCH AS PROPERLY ANCHORED PLASTIC TARPS.
3. PERIMETER SEDIMENT CONTROLS ALSO MUST BE INSTALLED AT STOCKPILE LOCATIONS TO PREVENT CONTACT WITH STORMWATER, INCLUDING RUN-ON.
4. STOCKPILES MUST BE LOCATED OUTSIDE OF ANY VEGETATED BUFFER AREAS AND SHOULD BE LOCATED AS FAR AS PRACTICABLE FROM STORMWATER CONVEYANCES AND IMPOUNDMENTS AND WATER BODIES.
5. STOCKPILE LOCATIONS SHALL BE NOTED ON THE SITE MAPS.

STOCKPILES

NOTES:

1. LARGE AREAS OF SOIL THAT ARE DENUDED OF VEGETATION AND HAVE NO PROTECTION FROM PARTICLES BEING PICKED UP AND CARRIED BY WIND SHOULD BE PROTECTED WITH A TEMPORARY COVER OR KEPT UNDER CONTROL WITH WATER OR OTHER SOIL ADHERING PRODUCTS TO PREVENT SOIL PARTICLES FROM BECOMING AIRBORNE, AND FROM EXITING THE SITE PERIMETER.

WATER TRUCKS OR OTHER DUST CONTROL AGENTS SHALL BE USED AS NEEDED DURING CONSTRUCTION TO MINIMIZE DUST GENERATED ON THE SITE. TACKIFIERS MAY BE USED TO HOLD SOIL IN PLACE AND PREVENT DUST. MANUFACTURER RECOMMENDATIONS FOR APPLICATION LOCATIONS AND RATES MUST BE USED FOR DUST CONTROL APPLICATIONS.

2. DUST CONTROL MUST BE PROVIDED BY THE GC TO A DEGREE THAT IS IN COMPLIANCE WITH APPLICABLE FEDERAL, LOCAL AND STATE DUST CONTROL REGULATIONS.
3. THE USE OF MOTOR OILS AND OTHER PETROLEUM BASED OR TOXIC LIQUIDS FOR DUST SUPPRESSION OPERATIONS IS PROHIBITED.
4. IN ADDITION TO BMPS, GC SHALL PERFORM PER PRACTICES AND PROCEDURES WHICH MINIMIZE AND PREVENT AIRBORNE DUST OR OTHER PARTICLES FROM OCCURRING.

DUST CONTROL

NOTES:

1. MATERIAL STORAGE AREAS SHOULD BE LOCATED, WHEN POSSIBLE, TO MINIMIZE EXPOSURE TO WEATHER. INSPECTIONS SHALL EVALUATE DISTURBED AREAS AND AREAS USED FOR STORING MATERIALS THAT ARE EXPOSED TO RAINFALL FOR EVIDENCE OF, OR THE POTENTIAL FOR, POLLUTANTS ENTERING THE DRAINAGE SYSTEM OR DISCHARGING FROM THE SITE. IF NECESSARY, THE MATERIALS MUST BE COVERED OR ORIGINAL COVERS MUST BE REPAIRED OR SUPPLEMENTED. ALSO, PROTECTIVE BERMS MUST BE CONSTRUCTED, IF NEEDED, TO CONTAIN RUNOFF FROM MATERIAL STORAGE AREAS. GC SHALL ADHERE TO ALL STATE AND LOCAL REGULATIONS PERTAINING TO MATERIAL STORAGE AREAS.
2. CHEMICALS, PAINTS, SOLVENTS, FERTILIZERS, AND OTHER TOXIC MATERIALS MUST BE STORED IN WATERPROOF CONTAINERS. EXCEPT DURING APPLICATION, THE CONTAINERS AND THE CONTENTS MUST BE KEPT IN TRUCKS OR INSIDE OF STORAGE FACILITIES. RUNOFF CONTAINING SUCH MATERIAL MUST BE COLLECTED, REMOVED FROM THE SITE, TREATED, AND DISPOSED OF AT AN APPROVED SOLID WASTE AND CHEMICAL DISPOSAL FACILITY.

MATERIAL LAYDOWN AND STORAGE AREA

NOTES:

1. CONCRETE WASTE MANAGEMENT PERTAINS TO WASTE FROM CONCRETE READY-MIX TRUCKS, MASONRY OPERATIONS, AND SIMILAR WASTE.
2. DISCHARGE OF EXCESS OR WASTE CONCRETE AND/OR WASH WATER FROM CONCRETE TRUCKS IS ALLOWED AT THE CONSTRUCTION SITE. ONLY COMMERCIALLY AVAILABLE ABOVE GROUND PORTABLE CONCRETE WASHOUT CONTAINERS ARE ALLOWED AND MUST BE PROTECTED FROM VEHICLE TRAFFIC AND CLEARLY IDENTIFIED BY LEGIBLE SIGNAGE, AND MUST BE LOCATED OUTSIDE OF VEGETATED BUFFERS AND AS FAR AS PRACTICABLE FROM STORMWATER CONVEYANCES AND IMPOUNDMENTS AND WATER BODIES. PORTABLE CONCRETE WASHOUT CONTAINERS SHALL CONTAIN AND/OR ACTIVELY MANAGE BOTH, SOLID AND FLUID, COMPONENTS OF THE MIX. CONCRETE WASHOUT CONTAINERS MUST BE CLEANED OR EXCHANGED WHEN THE REMAINING VOLUME IS REDUCED BY 85% TO PREVENT ANY POTENTIAL OVERFLOW IN A STORM EVENT.
3. ALTERNATIVELY, WASTE CONCRETE CAN BE PLACED INTO FORMS TO MAKE RIP RAP AND/OR OTHER USEFUL CONCRETE PRODUCTS. PORTABLE CONCRETE WASHOUT CONTAINERS SHALL BE DISPOSED IN ACCORDANCE WITH APPLICABLE LOCAL, STATE AND FEDERAL REGULATIONS. THE GC IS RESPONSIBLE FOR ASSURING THAT THESE PROCEDURES, APPLICABLE LAWS, AND ENVIRONMENTAL REGULATIONS ARE FOLLOWED. THE LOCATION OF CONCRETE WASHOUT CONTAINERS SHALL BE SHOWN ON THE SITE MAPS.

CEMENT AND CONCRETE WASHOUT

NOTES:

1. SUBSTANCES THAT HAVE THE POTENTIAL FOR POLLUTING SURFACE AND/OR GROUNDWATER MUST BE CONTROLLED BY ANY MEANS NECESSARY TO ENSURE THAT THOSE DO NOT DISCHARGE FROM THE SITE. IN THIS REGARD, POTENTIALLY POLLUTING SUBSTANCES SHALL BE STORED AND HANDLED IN A MANNER CONSISTENT WITH THE RISK OF IMPACT THOSE REPRESENT, AND ACCORDING WITH THE REGULATIONS.
2. NO SOLID MATERIALS, INCLUDING BUILDING MATERIALS, ARE ALLOWED TO BE DISCHARGED FROM THE SITE WITH STORMWATER. ALL SOLID WASTE, INCLUDING DISPOSABLE MATERIALS INCIDENTAL TO THE CONSTRUCTION ACTIVITIES, MUST BE COLLECTED AND PLACED IN CONTAINERS. RUBBISH, TRASH, GARBAGE, LITTER, OR OTHER SUCH MATERIALS SHALL BE DEPOSITED INTO SEALED CONTAINERS. MATERIALS SHALL BE PREVENTED FROM LEAVING THE PREMISES THROUGH THE ACTION OF WIND OR STORMWATER DISCHARGE INTO DRAINAGE DITCHES OR WATERS OF THE STATE. THE CONTAINERS SHALL BE HAULED AWAY FROM THE SITE AND EMPTIED WHEN THOSE BECOME 95% FULL, OR AS NECESSARY, BY A CERTIFIED TRASH DISPOSAL SERVICE. LIDS OR COVERS FOR THE CONTAINERS SHALL BE PROVIDED FOR USE DURING RAIN EVENTS TO PREVENT WASTE CONTACT WITH STORMWATER. WASTES THAT CANNOT BE STORED IN A CONTAINER MUST BE STORED UNDER COVER OR INDOORS. THE LOCATION OF SOLID WASTE RECEPTACLES SHALL BE SHOWN ON THE SITE MAPS.

SOLID WASTE DISPOSAL

NOTES:

1. CONTRACTOR SHALL PROVIDE DESIGNATED LOCATION FOR SORTING AND SEPARATING HAZARDOUS WASTES.
2. HAZARDOUS WASTE STORAGE MUST BE PROTECTED FROM WEATHER ELEMENTS AND HAVE RESTRICTED ACCESS.
3. HAZARDOUS WASTE STORAGE MUST COMPLY WITH LOCAL, STATE, AND FEDERAL REGULATIONS.
4. HAZARDOUS WASTE STORAGE MUST COMPLY WITH CONTRACT DOCUMENTS.

HAZARDOUS WASTE DISPOSAL

NOTES:

1. ALL PERSONNEL INVOLVED WITH CONSTRUCTION ACTIVITIES MUST COMPLY WITH STATE AND LOCAL SANITARY OR SEPTIC SYSTEM REGULATIONS. PORTABLE TOILETS MUST BE LOCATED AT LEAST 30 FEET FROM INLETS, CHANNELS, SWALES, OR PERMITTED LIMITS OF DISTURBANCE, AND MUST BE LOCATED AT LEAST 50 FEET FROM WATERS OF THE STATE, OR WATERS OF THE U.S.. PORTABLE TOILETS MUST BE SECURELY ANCHORED AND/OR TIED DOWN. SECONDARY CONTAINMENT SHALL BE PROVIDED AND FULL CAPACITY SHALL BE RESTORED IMMEDIATELY UPON DISCOVERY OF ITS DIMINISHMENT. THE LOCATION OF SANITARY FACILITIES SHALL BE SHOWN ON THE SITE MAPS.

SANITARY FACILITIES

NOTES:

1. USING WATER FROM BASINS, TRAPS, TANKS, OR OTHER WATER CONTAINMENT AREAS FOR IRRIGATION MINIMIZES DISCHARGES FROM THE SITE, AND IT MAY SATISFY OTHER NEEDS OF THE CONSTRUCTION PROJECT, SUCH AS DUST CONTROL, VEGETATIVE ESTABLISHMENT, ETC.
2. CARE SHOULD BE TAKEN THAT WATER UTILIZED FROM CONTAINMENT AREAS ON-SITE FOR CONSTRUCTION PURPOSES DOES NOT DISCHARGE OFF-SITE. IF DISCHARGE IS ANTICIPATED OR OBSERVED, DEWATERING PROCEDURES STATED IN THE DEWATERING DETAIL MUST BE FOLLOWED.
3. GC SHALL IMPLEMENT IRRIGATION OR DISPERSION AS PRACTICABLE TO REDUCE WATER VOLUME IN IMPOUNDMENTS AND TO FOSTER VEGETATION GROWTH.

IRRIGATION OR DISPERSION

NOTES:

1. STORM DRAIN INLET PROTECTION MEASURES SHALL PREVENT SOIL AND DEBRIS FROM ENTERING STORM DRAIN INLETS.
2. TEMPORARY CONTROLS SHALL BE CONSTRUCTED BEFORE THE SURROUNDING AREA IS DISTURBED.
3. TO PREVENT CLOGGING, STORM DRAIN CONTROL STRUCTURES MUST BE MAINTAINED FREQUENTLY.
4. CHECK ALL TEMPORARY CONTROL MEASURES DAILY, AND AFTER EACH STORM EVENT.
5. CONTROL MEASURES MUST BE BUILT PER DETAIL AND PLANS, AND MUST BE IN GOOD WORKING CONDITION AT ALL TIMES.

INLET PROTECTION

NOTES:

1. THE GC SHALL IDENTIFY MASONS' AREA WITH LEGIBLE SIGNAGE ON THE SITE. TO THE EXTENT PRACTICAL, ALL MASONRY TOOLS, MATERIAL, INCLUDING SAND AND SACKED CEMENT AND/OR MORTAR MATERIALS, MIX, AND EQUIPMENT SHALL BE LOCATED WITHIN THE AREA IDENTIFIED. MATERIALS VULNERABLE TO WEATHER ELEMENTS SHALL BE STORED IN CONTAINERS AT THE END OF EACH WORK DAY; SUCH MATERIALS SHALL REMAIN STORED IN CONTAINERS WHEN NOT IN USE.
2. RUNOFF CONTROL, SUCH AS DIVERSION BERMS, SILT FENCE, SILT DIKE, OR OTHER MEANS OF CONTAINMENT SHALL BE PROVIDED TO PREVENT THE MIGRATION OF STORMWATER POLLUTANTS FROM THE MASONS' AREA. COVERED RECEPTACLES FOR DEBRIS AND TRASH DISPOSAL SHALL ALSO BE PROVIDED.
3. THE MASONS' AREA SHALL MEET OSHA AND OTHER REGULATORY REQUIREMENTS FOR PERSONAL PROTECTIVE EQUIPMENT (PPE), FIRE EXTINGUISHERS, ETC. GC SHALL PROVIDE SCREENING OR OTHER TECHNOLOGIES FOR MASONS' AREA TO PREVENT AIRBORNE TRANSPORT OF CEMENT DUST AND OTHER PARTICULATES DUE TO HIGH SPEED WIND OR OTHER CONDITIONS. THE LOCATION OF THE MASONS' AREA SHALL BE SHOWN ON THE SITE MAPS.

MASONS' AREA

NOTES:

1. VERIFY WITH ENGINEER AND AUTHORITY HAVING JURISDICTION WHICH DISCHARGES FROM DEWATERING ACTIVITIES ARE ALLOWED OR ARE NOT ALLOWED NON-STORMWATER DISCHARGES UNDER THE GENERAL PERMIT AND OTHER REGULATIONS. OBTAIN ALL DEWATERING PERMITS AND AUTHORIZATIONS REQUIRED BY STATE AND LOCAL REGULATIONS.
2. GC MUST WAIT TO HAVE WRITTEN COPY OF ALL REQUIRED DEWATERING PERMITS AND AUTHORIZATIONS BEFORE PERFORMING DEWATERING ACTIVITIES.
3. DISCHARGES FROM DEWATERING OPERATIONS MUST BE DIRECTED THROUGH AN APPROPRIATE POLLUTION PREVENTION/TREATMENT SYSTEM OF CONTROL MEASURES, SUCH AS A SEDIMENT/FILTER BAG, SEDIMENT TRAP OR SEDIMENT BASIN, AND OTHERS, AS NEEDED, PRIOR TO BEING DISCHARGED FROM THE SITE OR INTO A WATER BODY OF THE STATE. UNDER NO CIRCUMSTANCES ARE DISCHARGES FROM DEWATERING OPERATIONS TO BE DISCHARGED DIRECTLY INTO SANITARY SEWER SYSTEMS, STREAMS, RIVERS, LAKES OR OTHER AREAS BEYOND THE PERMITTED PROJECT AREA. LIKEWISE, DISCHARGES INTO STORM SEWER SYSTEMS THAT DO NOT DRAIN TO A SUITABLE ON-SITE TREATMENT FACILITY, SUCH AS A BASIN, ARE ALSO PROHIBITED. DISCHARGES FROM DEWATERING OPERATIONS MUST ALSO BE CONDUCTED IN A MANNER SUFFICIENT TO PREVENT EROSION FROM THE DISCHARGE RUNOFF.
4. IN SEDIMENT TRAP OR BASIN OR POND DEWATERING OPERATIONS, WATER MUST ONLY BE REMOVED FROM THE SURFACE OF THE CONTAINED WATER. A SKIMMER OR SIMILAR FLOATING DEVICE MUST BE USED, TO ONLY REMOVE THE WATER AT THE SURFACE.
5. DO NOT DISCHARGE ON A SLOPE GREATER THAN THREE PERCENT NOR WITHIN 20 FEET OF A SURFACE WATER BODY.
6. DEWATERING SHALL NOT OCCUR DURING OR IMMEDIATELY AFTER PRECIPITATION EVENTS, BUT EXCEPTIONS SHALL BE EVALUATED ON CASE BY CASE BASIS. CONTACT THE ENGINEER AND AUTHORITY HAVING JURISDICTION

DEWATERING

NOTES:

1. CONSIDERATION MUST BE GIVEN TO ANTICIPATED CLIMATE AND SEASONAL CONDITIONS WHEN PLANTING SEED.
2. SEED SHALL BE FREE OF WEEDY SPECIES AND APPROPRIATE FOR SITE SOILS AND REGIONAL CLIMATE. SEED AND MULCH PER THE CONSTRUCTION DRAWINGS IMMEDIATELY AFTER TOPSOIL IS APPLIED AND FINAL GRADE IS REACHED.
3. THE SITE HAS ACHIEVED FINAL STABILIZATION ONCE ALL AREAS ARE COVERED WITH BUILDING FOUNDATION OR PAVEMENT, OTHER LANDSCAPING COVER (STONE, MULCH, ETC.), OR HAVE A STAND OF GRASS WITH A MINIMUM OF 70 PERCENT DENSITY OVER THE ENTIRE VEGETATED AREA, OR GREATER IN ACCORDANCE WITH THE GENERAL PERMIT REQUIREMENTS.
4. VEGETATED AREAS MUST BE WATERED, FERTILIZED, AND RESEEDED AS NEEDED TO ACHIEVE THIS REQUIREMENT.
5. THE VEGETATIVE DENSITY MUST BE MAINTAINED THROUGH PROJECT COMPLETION TO BE CONSIDERED STABILIZED. AREAS PROTECTED BY EROSION CONTROL BLANKETS ARE NOT PERMANENTLY STABILIZED UNTIL THE APPLICABLE GENERAL PERMIT REQUIREMENT FOR FINAL VEGETATIVE DENSITY IS ACHIEVED.
6. RIP-RAP, MULCH, GRAVEL, DECOMPOSED GRANITE OR OTHER EQUIVALENT PERMANENT STABILIZATION MEASURES MAY BE EMPLOYED IN LIEU OF VEGETATION BASED ON SITE-SPECIFIC CONDITIONS, DESIGN AND GOVERNING AUTHORITY APPROVAL.
7. ALL VEGETATED AREAS SHALL BE INSPECTED REGULARLY TO CONFIRM THAT A HEALTHY STAND OF GRASS IS MAINTAINED.

SEEDING/VEGETATION REQUIREMENTS

NOTES:

1. THE GC IS REQUIRED TO, AT A MINIMUM, INITIATE SOIL STABILIZATION MEASURES IMMEDIATELY WHENEVER ANY CLEARING, GRADING, EXCAVATING OR OTHER EARTH DISTURBING ACTIVITIES HAVE PERMANENTLY CEASED ON ANY PORTION OF THE SITE, OR TEMPORARILY CEASED ON ANY PORTION OF THE SITE .
2. **ALL PERIMETER DIKES, SWALES, DITCHES, PERIMETER SLOPES AND ALL SLOPES STEEPER THAN 3 HORIZONTAL TO 1 VERTICAL (3:1) SHALL BE PROVIDED TEMPORARY OR PERMANENT STABILIZATION WITH GROUND COVER (SUCH AS THE USE OF FAST-GERMINATING ANNUAL GRASS/GRAIN VARIETIES, STRAW/HAY MULCH, WOOD CELLULOSE FIBERS, TACKIFIERS, NETTING AND/OR BLANKETS) AS SOON AS PRACTICABLE BUT IN ANY EVENT WITHIN 7 CALENDAR DAYS FROM THE LAST LAND-DISTURBING ACTIVITY. (PER NC GENERAL PERMIT - NCG 010000)**
3. **ALL OTHER DISTURBED AREAS SHALL BE PROVIDED TEMPORARY OR PERMANENT STABILIZATION WITH GROUND COVER (SUCH AS THE USE OF FAST-GERMINATING ANNUAL GRASS/GRAIN VARIETIES, STRAW/HAY MULCH, WOOD CELLULOSE FIBERS, TACKIFIERS, NETTING AND/OR BLANKETS) AS SOON AS PRACTICABLE BUT IN ANY EVENT WITHIN 21 CALENDAR DAYS FROM THE LAST LAND-DISTURBING ACTIVITY.(PER NCDEQ SECTION 6.01 OF PRACTICE STANDARDS AND SPECIFIACTIONS)**
4. THE GC HAS 21 DAYS FROM INITIATION OF STABILIZATION TO COMPLETE SOIL PREPARATION, SEEDING, MULCHING, AND ANY OTHER REQUIRED ACTIVITIES RELATED TO THE PLANTING AND ESTABLISHMENT OF VEGETATION. THE GC ALSO HAS 7 DAYS FROM INITIATION OF STABILIZATION TO COMPLETELY INSTALL NON-VEGETATED MEASURES, IF UTILIZED.
5. ALL DISTURBED AREAS MUST BE STABILIZED TEMPORARILY WITH THE USE OF FAST-GERMINATING ANNUAL GRASS/GRAIN VARIETIES APPROPRIATE FOR SITE SOIL AND CLIMATE CONDITIONS. MULCH IS REQUIRED FOR ALL SEEDING APPLICATIONS, AND ALL MULCH APPLICATIONS MUST INCLUDE A SUITABLE FORM OF MULCH ANCHORING TO MINIMIZE MOVEMENT OF MULCH BY WIND OR WATER.
6. ALTERNATIVE STABILIZATION MEASURES TO SEEDING, SUCH AS ANCHORED MULCH APPLICATION (WITHOUT SEEDING), MAY BE UTILIZED DURING PERIODS WHEN VEGETATIVE GROWTH IS UNLIKELY (E.G. WINTER MONTHS).
7. IT IS NOT ACCEPTABLE TO ALLOW BARE SOIL TO REMAIN EXPOSED AT ANY TIME DURING THE YEAR, REGARDLESS OF WEATHER/TEMPERATURE/SITE CONDITIONS.
8. ALTERNATIVE STABILIZATION MEASURES INCLUDE, BUT ARE NOT LIMITED TO: ANCHORED STRAW/HAY MULCH, WOOD CELLULOSE FIBER MULCH, SPRAY-ON SOIL GLUES/BINDERS, AND ROLLED EROSION CONTROL PRODUCTS.
9. ALL ROLLED EROSION CONTROL PRODUCTS SHALL HAVE CURRENT QDOR(TM) STATUS ISSUED BY THE EROSION CONTROL TECHNOLOGY COUNCIL (ECTC) PLUS ANY STATE OR AGENCY-SPECIFIC REQUIREMENTS. EVIDENCE OF QDOR(TM) APPROVAL SHALL ACCOMPANY THE PRODUCT SHIPPED TO THE JOBSITE FOR READY IDENTIFICATION BY THE CONTRACTOR OR AGENCY INSPECTOR.
10. ROLLED EROSION CONTROL PRODUCTS (NETS, BLANKETS, TURF REINFORCED MATS) AND VEGETATED AREAS NOT MEETING REQUIRED VEGETATIVE DENSITIES FOR FINAL STABILIZATION MUST BE INSPECTED DAILY. RILING, RUTTING AND OTHER SIGNS OF EROSION INDICATE THE SPECIFIED EROSION CONTROL DEVICE IS NOT FUNCTIONING OR INSTALLED PROPERLY AND/OR ADDITIONAL EROSION CONTROL DEVICES ARE WARRANTED.

TEMPORARY SEEDING OR STABILIZATION

NOTES:

1. PERMANENT STABILIZATION SHALL BE ACCOMPLISHED IN ALL DISTURBED AREAS BY COVERING THE SOIL WITH PAVEMENT, BUILDING STRUCTURES, VEGETATION, OR OTHER FORMS OF SOIL STABILIZATION.
2. THE GC IS REQUIRED TO INITIATE PERMANENT SOIL STABILIZATION MEASURES IMMEDIATELY UPON REACHING FINAL GRADE.
3. **ALL PERIMETER DIKES, SWALES, DITCHES, PERIMETER SLOPES AND ALL SLOPES STEEPER THAN 3 HORIZONTAL TO 1 VERTICAL (3:1) SHALL BE PROVIDED TEMPORARY OR PERMANENT STABILIZATION WITH GROUND COVER (SUCH AS THE USE OF FAST-GERMINATING ANNUAL GRASS/GRAIN VARIETIES, STRAW/HAY MULCH, WOOD CELLULOSE FIBERS, TACKIFIERS, NETTING AND/OR BLANKETS) AS SOON AS PRACTICABLE BUT IN ANY EVENT WITHIN 7 CALENDAR DAYS FROM THE LAST LAND-DISTURBING ACTIVITY. (PER NC GENERAL PERMIT - NCG 010000)**
4. **ALL OTHER DISTURBED AREAS SHALL BE PROVIDED TEMPORARY OR PERMANENT STABILIZATION WITH GROUND COVER (SUCH AS THE USE OF FAST-GERMINATING ANNUAL GRASS/GRAIN VARIETIES, STRAW/HAY MULCH, WOOD CELLULOSE FIBERS, TACKIFIERS, NETTING AND/OR BLANKETS) AS SOON AS PRACTICABLE BUT IN ANY EVENT WITHIN 14 CALENDAR DAYS FROM THE LAST LAND-DISTURBING ACTIVITY.(PER NCDEQ SECTION 6.01 OF PROCTICE STANDARDS AND SPECIFICATIONS)**
5. THE GC HAS 21 DAYS FROM INITIATION OF STABILIZATION TO COMPLETE SOIL PREPARATION, SEEDING, MULCHING, AND ANY OTHER REQUIRED ACTIVITIES RELATED TO THE PLANTING AND ESTABLISHMENT OF VEGETATION. THE GC ALSO HAS 7 DAYS FROM INITIATION OF STABILIZATION TO COMPLETELY INSTALL NON-VEGETATED MEASURES, IF UTILIZED.

SOILS MUST BE PREPARED BEFORE INSTALLATION OF SOD OR SEED.

6. AT THE COMPLETION OF GROUND-DISTURBING ACTIVITIES, THE ENTIRE SITE MUST HAVE PERMANENT VEGETATIVE COVER MEETING VEGETATIVE DENSITY REQUIREMENTS IN THE GENERAL PERMIT, OR MULCH PER LANDSCAPE PLAN, IN ALL AREAS NOT COVERED BY HARDSCAPE (STONE, PAVEMENT, BUILDINGS, ETC.).
7. SEEDED AREAS SHALL BE PROTECTED WITH STRAW MULCH, HYDRAULIC MULCH OR A ROLLED EROSION CONTROL PRODUCT. STRAW MULCH MUST BE TACKIFIED OR CRIMPED BY DISC OR OTHER MACHINERY, AND ROLLED EROSION CONTROL PRODUCTS MUST BE INSTALLED PER MANUFACTURER RECOMMENDATIONS. ONLY ROLLED EROSION CONTROL PRODUCTS ARE PERMITTED TO BE USED IN FLOW CONVEYANCES.
8. ALL AREAS TO BE SEEDED MUST MEET TOPSOIL DEPTH, PH AND ORGANIC CONTENT REQUIREMENTS.
9. FINAL SITE STABILIZATION IS ACHIEVED WHEN PERENNIAL VEGETATIVE COVER PROVIDES PERMANENT STABILIZATION WITH A UNIFORM DENSITY GREATER THAN 70 PERCENT OVER THE ENTIRE AREA TO BE STABILIZED BY VEGETATIVE COVER. THIS AREA IS EXCLUSIVE OF AREAS THAT ARE COVERED WITH ROCK (CRUSHED GRANITE, GRAVEL, ETC.) OR LANDSCAPE MULCH, PAVED OR HAVE A BUILDING OR OTHER PERMANENT STRUCTURE ON THEM.

PERMANENT SEEDING, SOD OR MULCHING

INSTRUCTIONS FOR TEMPORARY STABILIZATION USING

VEGETATION

INSTALLATION

1. REFER TO PLANS FOR LOCATION, EXTENT, AND SPECIFICATIONS. IF THERE ARE QUESTIONS OR PROBLEMS WITH THE LOCATION, EXTENT, OR METHODS OF INSTALLATION, CONTACT THE ENGINEER, ARCHITECT, OR RESPONSIBLE PERSONNEL ON THE SITE FOR ASSISTANCE. EROSION CONTROL PERSONNEL HAVE COPIES OF INSTRUCTIONS AND MAY BE ABLE TO OFFER ASSISTANCE.

IF THE DISTURBANCE IS NOT PROPERLY STABILIZED THE FIRST TIME SO THAT EROSION IS RESTRAINED, THE SEEDING WILL HAVE TO BE REPEATED.

2. USE THE APPLICATION RATES FOR LIME, FERTILIZER, SEED, MULCH, ETC. SPECIFIED IN THE PLAN, OR USE THE RATES BELOW FOR THE APPROPRIATE SEASON.

ALL SEASONS:

LIME: 90 POUNDS PER 1000 SQUARE FEET (2 TONS PER ACRE).
FERTILIZER: 10-10-10; 16 POUNDS PER 1000 SQUARE FEET (700 POUNDS PER ACRE).
STRAW MULCH: 80 POUNDS PER 1000 SQUARE FEET (1.5 TO 2 TONS PER ACRE); USE ENOUGH STRAW TO COVER 75% OF THE GROUND.

MARCH - MAY

RYE GRAIN: 3 POUNDS PER 1000 SQUARE FEET (150 POUNDS PER ACRE).
OR
SPRING OATS: 3 POUNDS PER 1000 SQUARE FEET (125 POUNDS PER ACRE).

MAY - AUGUST

MILLET: 1 POUND PER 1000 SQUARE FEET (40 POUNDS PER ACRE).
OR
SORGHUM HYBRIDS: 1 POUND PER 1000 SQUARE FEET (40 POUNDS PER ACRE).

AUGUST 15 - NOVEMBER 15

OATS: BEFORE OCTOBER 1: 2.5 POUNDS PER 1000 SQUARE FEET (125 POUNDS PER ACRE).
OR
WHEAT: AFTER OCTOBER 1: 3 POUNDS PER 1000 SQUARE FEET (180 POUNDS PER ACRE).

NOVEMBER 15 - FEBRUARY

VEGETATION IS NOT AN APPROPRIATE STABILIZATION DURING THESE SEASONS; USE ANOTHER TYPE OF TEMPORARY GROUND COVER, SUCH AS MULCHING.

3. **SEEDBED PREPARATION:** REMOVE ROCKS, STUMPS, ROOTS, ETC. SINCE THEY WILL INTERFERE WITH SEEDING AND MAINTENANCE. THE SMOOTH, COMPACTED SURFACE OF CUT AND FILL SLOPES IS NOT A GOOD SEED BED; APPLY LIME AND FERTILIZER, THEN RIP THE SOIL 4-6 INCHES TO MIX THE NUTRIENTS INTO THE SOIL AND TO LOOSEN AND ROUGHEN IT TO RECEIVE THE SEED.
4. **SEEDING:** APPLY SEED AT THE RECOMMENDED RATE, AND GO OVER THE SURFACE WITH A CULTIPACKER WHERE POSSIBLE TO BRING THE SEED INTO CONTACT WITH THE SOIL.
5. **MULCHING:** THE AREA SEEDED MUST BE MULCHED TO PROTECT THE BARE SOIL UNTIL THE VEGETATION IS ESTABLISHED AND TO RETAIN MOISTURE TO PROMOTE SEED GERMINATION AND PLANT GROWTH. APPLY ENOUGH MULCH TO COVER 75% OF THE SOIL SURFACE. TO KEEP IT IN PLACE AND PREVENT WIND OR WATER FROM DISLODGING IT, THE MULCH SHOULD BE HELD IN PLACE BY TACKING IT WITH ASPHALT OR COVERING IT WITH NETTING.

MAINTENANCE

AREAS MUST BE RESEEDED AND MULCHED WHERE THE VEGETATION FAILS TO ESTABLISH ITSELF OR IS DAMAGED BY RUNOFF OR CONSTRUCTION ACTIVITY. IF THE TEMPORARY VEGETATION SHOULD FAIL FOR ANY REASON BEFORE THE PERMANENT STABILIZATION IS PROVIDED, IT MUST BE REPLACED WITH AN APPROPRIATE TYPE OF COVER SUFFICIENT TO RESTRAIN EROSION.

INSTRUCTIONS FOR PERMANENT STABILIZATION USING

VEGETATION

INSTALLATION

1. REFER TO PLANS FOR LOCATION, EXTENT, AND SPECIFICATIONS. IF THERE ARE QUESTIONS OR PROBLEMS WITH THE LOCATION, EXTENT, OR METHODS OF INSTALLATION, CONTACT THE ENGINEER, ARCHITECT, OR RESPONSIBLE PERSONNEL ON THE SITE FOR ASSISTANCE. EROSION CONTROL PERSONNEL HAVE COPIES OF INSTRUCTIONS AND MAY BE ABLE TO OFFER ASSISTANCE.

IF THE DISTURBANCE IS NOT PROPERLY STABILIZED THE FIRST TIME SO THAT EROSION IS RESTRAINED, THE SEEDING WILL HAVE TO BE REPEATED UNTIL IT IS SUCCESSFUL.

2. USE THE APPLICATION RATES FOR LIME, FERTILIZER, SEED, MULCH, ETC. SPECIFIED IN THE PLAN, OR USE THE RATES BELOW FOR THE APPROPRIATE SEASON. IF SEEDING IS TO BE DONE IN A SEASON NOT LISTED BELOW, USE VEGETATION COMPATIBLE WITH THAT SEASON OR ANOTHER METHOD OF PERMANENT STABILIZATION.
3. TALL FESCUE:

SEEDING DATES: FEBRUARY 15 - MAY, OR AUGUST 15 - OCTOBER 15

LIME: 135 POUNDS PER 1000 SQUARE FEET (3 TONS PER ACRE)

FERTILIZER: 10-10-10; 23 POUNDS PER 1000 SQUARE FEET (1000 POUNDS PER ACRE). A SPLIT APPLICATION OF 500 POUNDS PER ACRE INITIALLY AND ANOTHER 500 POUNDS IN THE SPRING OR FALL IS PREFERABLE. ADD 500 POUNDS PER ACRE SUPER PHOSPHATE WHERE THE SUBSOIL IS EXPOSED.

SEED: 1.5 POUNDS PER 1000 SQUARE FEET (60 POUNDS PER ACRE)

MULCH: 80 POUNDS OF SMALL GRAIN STRAW PER 1000 SQUARE FEET (APPROXIMATELY 2 BALES) OR 1.5 -2 TONS PER ACRE; USE ENOUGH STRAW TO COVER 75% OF THE GROUND.

TEMPORARY COVER: 0.5 POUNDS OF GERMAN OR BROWNTOP MILLET PER 1000 SQUARE FEET (20 POUNDS PER ACRE)

3. SEEDBED PREPARATION: REMOVE ROCKS, STUMPS, ROOTS, ETC. SINCE THEY WILL INTERFERE WITH SEEDING AND MAINTENANCE. THE SMOOTH, COMPACTED SURFACE OF CUT AND FILL SLOPES IS NOT A GOOD SEEDBED; APPLY LIME AND FERTILIZER, THEN RIP THE SOIL 4 TO 6 INCHES TO MIX THE NUTRIENTS INTO THE SOIL AND TO LOOSEN AND ROUGHEN IT TO RECEIVE THE SEED.
4. SEEDING: APPLY SEED AT THE RECOMMENDED RATE, AND GO OVER THE SURFACE WITH A CULTIPACKER WHERE POSSIBLE TO BRING THE SEED INTO CONTACT WITH THE SOIL.
5. MULCHING: THE AREA SEEDED MUST BE MULCHED TO PROTECT THE BARE SOIL UNTIL THE VEGETATION IS ESTABLISHED AND TO RETAIN MOISTURE TO PROMOTE SEED GERMINATION AND PLANT GROWTH. APPLY ENOUGH MULCH TO COVER 75% OF THE SURFACE. TO KEEP IT IN PLACE AND PREVENT WIND OR WATER FROM DISLODGING IT, THE MULCH SHOULD BE HELD IN PLACE BY TACKING IT WITH ASPHALT, CUTTING IT WITH A STRAIGHT-SET DISK, OR COVERING IT WITH NETTING.

MAINTENANCE

ANY PLACES WHERE THE VEGETATION FAILS TO ESTABLISH ITSELF OR IS DAMAGED BY RUNOFF OR CONSTRUCTION ACTIVITY MUST BE RESEEDED. WHERE THE VEGETATION FAILS TO RESTRAIN EROSION, OTHER EROSION CONTROL MEASURES MUST BE INSTALLED.

NPDES Stormwater Discharge Permit for Construction Activities (NCGO1) NCDENR/Division of Water Quality

NEW STABILIZATION TIMEFRAMES
(Effective Aug. 3, 2011)

Site Area Description	Stabilization	Timeframe Exceptions
Perimeter dikes, swales, ditches, slopes	7 days	None
High Quality Water (HQW) Zones	7 days	None
Slopes steeper than 3:1	7 days	If slopes are 10' or less in length and are not steeper than 2:1, 14 days are allowed.
Slopes 3:1 or flatter	14 days	7 days for slopes greater than 50' in length.
All other areas with slopes flatter than 4:1	14 days	None, except for perimeters and HQW Zones.

Pennoni
Firm License F-1267
PENNONI ASSOCIATES INC.
5430 Wade Park Boulevard, #106
Raleigh, NC 27607
T 919.929.1173 F 919.493.6548

ALL DIMENSIONS MUST BE VERIFIED BY CONTRACTOR AND OWNER MUST BE NOTIFIED OF ANY DISCREPANCIES BEFORE PROCEEDING WITH WORK

NORTH CAROLINA PROFESSIONAL ENGINEER SEAL 047736 Ethan S Mindrebo
Preliminary

TARHEEL LODGING REDEVELOPMENT PHASE 2
1742 FORDHAM BLVD.
CHAPEL HILL, NC

EROSION AND SEDIMENTATION NOTES

TARHEEL LODGING, LLC & UNICORN GROUP FIFTEEN, LLC
6110 FALCON BRIDDGE ROAD
CHAPEL HILL, NC 27517

DATE	NO.	REVISIONS	BY
04/28/2023	23	PHASE 2 MODIFICATIONS	DTR

ALL DOCUMENTS PREPARED BY PENNONI ASSOCIATES ARE INSTRUMENTS OF SERVICE IN RESPECT OF THE PROJECT. THEY ARE NOT INTENDED OR REPRESENTED TO BE SUITABLE FOR REUSE BY OWNER OR OTHERS ON THE EXTENSIONS OF THE PROJECT OR ON ANY OTHER PROJECT. ANY REUSE WITHOUT WRITTEN VERIFICATION OR ADAPTATION BY PENNONI ASSOCIATES FOR THE SPECIFIC PURPOSE INTENDED WILL BE AT OWNERS SOLE RISK AND WITHOUT LIABILITY OR LEGAL EXPOSURE TO PENNONI ASSOCIATES; AND OWNER SHALL INDEMNIFY AND HOLD HARMLESS PENNONI ASSOCIATES FROM ALL CLAIMS, DAMAGES, LOSSES AND EXPENSES ARISING OUT OF OR RESULTING THEREFROM.

PROJECT	RKINV18001
DATE	2018/05/21
DRAWING SCALE	N.T.S.
DRAWN BY	CJJ
APPROVED BY	ESM

CS8501

U:\Accounts\RKINV\RKINV18001 - Hotel Site Chapel Hill\DESIGN_SHEETS\CS8501.dwg PLOTTED: 6/19/2023 11:40 AM, BY: Jason Thibodeaux PLOTSTYLE: Pennoni NCS.stb PROJECT STATUS: ----

GRAVEL CONSTRUCTION ENTRANCE NOTES:

1. ALL SITE ACCESS MUST BE CONFINED TO THE CONSTRUCTION EXIT(S). BARRICADE TO PREVENT USE OF ANY LOCATIONS OTHER THAN THE CONSTRUCTION EXIT(S) WHERE VEHICLES OR EQUIPMENT MAY ACCESS THE SITE.
2. CONTRACTOR TO LOCATE TEMPORARY CONSTRUCTION FENCING, JERSEY BARRIERS, OR BOTH ALONG THE SIDES OF THE CONSTRUCTION EXIT TO PREVENT CONSTRUCTION TRAFFIC FROM SHORT CIRCUITING/BYPASSING THE EXIT.
3. IF THE ACTION OF VEHICLES TRAVELING OVER THE GRAVEL CONSTRUCTION EXIT(S) IS NOT SUFFICIENT TO PREVENT TRACKING OF DIRT, DUST OR MUD, THEN TIRES MUST BE WASHED BEFORE THE VEHICLES ENTER A PUBLIC ROAD. ALL WASH WATER MUST BE ROUTED TO A SEDIMENT TRAP OR OTHER TREATMENT AREA AND SHALL NOT BE DIRECTLY DISCHARGED OFF-SITE.
4. LOCATIONS WHERE VEHICLES ENTER AND EXIT THE SITE MUST BE INSPECTED FOR EVIDENCE OF SEDIMENT TRACKING BEYOND THE PERMITTED PROJECT AREA. ALL MATERIALS SPILLED, DROPPED, WASHED OR TRACKED FROM VEHICLES ONTO ROADWAYS OR INTO STORM DRAINS MUST BE REMOVED IMMEDIATELY.
5. ANY SEDIMENT DEPOSITED ON THE ROADWAY SHALL BE SWEPT AS NECESSARY (AND WITHIN THE SAME DAY AS DISCOVERY) AND DISPOSED OF IN AN APPROPRIATE MANNER. SEDIMENT SHALL NOT BE WASHED INTO STORM SEWER SYSTEMS.
6. EXIT(S) SHALL BE MAINTAINED IN A CONDITION WHICH WILL PREVENT TRACKING OR FLOW OF MUD BEYOND THE EXIT(S). THIS MAY REQUIRE PERIODIC TOP DRESSING OF THE CONSTRUCTION EXIT(S) AS CONDITIONS DEMAND.
7. CONTRACTOR SHALL BE PERMITTED TO TURN THE STONE WHEN THE SURFACE BECOMES SMOOTH AND SURFACE VOIDS ARE FILLED TO MAINTAIN EFFECTIVENESS OF CONSTRUCTION EXIT UNTIL SUCH TIME THAT VOIDS BELOW THE SURFACE BECOME FILLED AND THE CONSTRUCTION EXIT IS NO LONGER EFFECTIVE. AT SUCH A TIME THE CONTRACTOR SHALL REMOVE THE INEFFECTIVE STONE AND REPLACE PER DETAIL.
8. IF EXIT BMP IS STILL INEFFECTIVE, GC MUST CONTACT THE ENGINEER AND SUBMIT AN RFI AS NECESSARY.

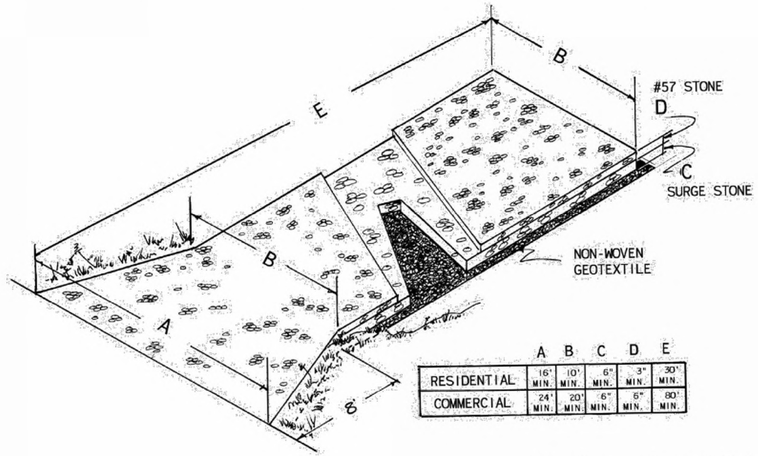

	A	B	C	D	E
RESIDENTIAL	16' MIN.	10' MIN.	6" MIN.	3" MIN.	30" MIN.
COMMERCIAL	24' MIN.	20' MIN.	6" MIN.	6" MIN.	80' MIN.

GRAVEL CONSTRUCTION ENTRANCE

NOT TO SCALE

ENGINEERING DEPARTMENT STANDARD DETAILS

TITLE	REVISIONS			DET.NO.
GRAVEL CONSTRUCTION ENTRANCE	NO	DATE	BY	E-1

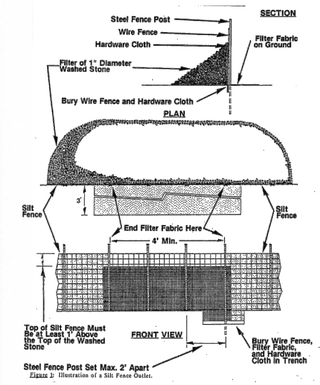

Figure 2: Illustration of a Silt Fence Outlet.

SILT FENCE OUTLET

NOT TO SCALE

INSTRUCTIONS FOR

SILT FENCE OUTLET

INSTALLATION

1. REFER TO THE PLANS FOR LOCATIONS AND SPECIFICATIONS. DURING INSTALLATION OF THE SILT BARRIER OR SILT FENCE, INSPECT THE INSTALLATION TO DETERMINE IF OUTLETS ARE NEEDED ACCORDING TO THE CRITERIA SET FORTH IN THE SPECIFICATIONS FOR THE BARRIER AND FENCE. IF THERE ARE QUESTIONS OR PROBLEMS WITH THE LOCATION, EXTENT, OR METHOD OF INSTALLATION, CONTACT THE ENGINEER, ARCHITECT, OR RESPONSIBLE PERSONNEL ON THE SITE FOR ASSISTANCE. EROSION CONTROL PERSONNEL HAVE COPIES OF INSTRUCTIONS AND MAY HAVE PHOTOGRAPHS OF PROPERLY INSTALLED OUTLETS AS AN AID TO INSTALLATION.

   IF THE SILT FENCE OUTLET IS NOT INSTALLED CORRECTLY THE FIRST TIME, IT WILL HAVE TO BE REBUILT.

2. DETERMINE THE EXACT LOCATION OF THE OUTLET BEFORE COMPLETING INSTALLATION OF THE SILT BARRIER OR SILT FENCE, TAKING INTO CONSIDERATION:

   * INSTALL THE OUTLET AT THE LOWEST POINT(S) IN THE BARRIER OR FENCE WHERE WATER WILL POND.
   * INSTALL THE OUTLET WHERE IT IS ACCESSIBLE FOR INSTALLATION, MAINTENANCE, AND REMOVAL.
   * ALLOW AT LEAST:

     15 FEET BETWEEN THE BARRIER OR FENCE AND SINGLE-STORY BUILDINGS.

     25 FEET FOR FORK LIFTS BETWEEN THE BARRIER OR FENCE AND MULTIPLE-STORY BUILDINGS.

     10 FEET BETWEEN THE BARRIER OR FENCE AND THE TOE OF FILL SLOPES.
   * PLACE THE OUTLET SO THAT WATER FLOWING THROUGH IT WILL NOT CREATE AN EROSION HAZARD BELOW: AVOID STEEP SLOPES BELOW THE OUTLET AND AREAS WITHOUT PROTECTIVE VEGETATION. USE SLOPE DRAINS IF NECESSARY.
   * DETERMINE THE LOCATION OF THE OUTLET: FOR A SILT BARRIER, WHEN THE TRENCH IS DUG TO BURY THE BOTTOM OF THE FABRIC BECAUSE THE BARRIER WILL BE OMITTED AT THE OUTLET; FOR A SILT FENCE, WHEN THE WIRE FENCE IS IN PLACE BECAUSE THE FILTER FABRIC WILL BE OMITTED AT THE OUTLET.

3. REFER TO THE ILLUSTRATIONS OF THE OUTLET IN THE PLAN.

4. CLEAR STUMPS AND ROOTS FROM THE LOCATION OF THE OUTLET. CLEAR ADEQUATE ACCESS FOR THE EQUIPMENT NEEDED FOR INSTALLATION, MAINTENANCE, AND REMOVAL.

5. FOR A SILT BARRIER:

   * JUST BELOW THE GAP IN THE BARRIER, PLACE A LAYER OF FILTER FABRIC ON THE GROUND TO PROTECT THE SOIL FROM EROSION BY OUTFLOW FROM THE OUTLET; PLACE 6 INCHES OF THE UPPER EDGE IN THE TRENCH. STAKE THE REMAINING EDGES OF THE FABRIC TO HOLD IT IN PLACE.
   * ALONG THE GAP WHERE THE OUTLET WILL GO, PLACE STEEL FENCE POSTS FOR STRENGTH. THE POSTS MUST BE A MAXIMUM OF 2 FEET APART AND DRIVEN INTO SOLID GROUND AT LEAST 18 INCHES.
   * PLACE HARDWARE CLOTH (WELDED GALVANIZED SCREEN WITH SQUARE 1/4 - 1/2-INCH HOLES) ON THE UPHILL SIDE OF THE POSTS TO HOLD THE WASHED STONE IN PLACE. PUT 6 INCHES OF THE BOTTOM OF THE CLOTH IN THE TRENCH AND FASTEN IT TO THE POSTS WITH LENGTHS OF WIRE.
   * BURY THE BOTTOM OF THE HARDWARE CLOTH AND THE UPPER EDGE OF THE FILTER FABRIC BELOW THE OUTLET IN THE TRENCH AND COMPACT THE FILL.
   * PLACE A FILTER OF 1-INCH DIAMETER WASHED STONE ON THE UPHILL SIDE OF THE OUTLET. PILE THE STONE UP TO THE TOP OF THE HARDWARE CLOTH AND OVER THE JOINT BETWEEN THE OUTLET AND THE BARRIER.

6. FOR A SILT FENCE:

   * JUST BELOW THE GAP IN THE FENCE, PLACE A LAYER OF FILTER FABRIC ON THE GROUND TO PROTECT THE SOIL FROM EROSION BY OUTFLOW FROM THE OUTLET; PLACE 6 INCHES OF THE UPPER EDGE IN THE TRENCH. STAKE THE OTHER EDGES OF THE FABRIC TO HOLD IT IN PLACE.
   * ALONG THE GAP WHERE THE OUTLET WILL GO, PLACE ADDITIONAL STEEL FENCE POSTS FOR STRENGTH. THE POSTS MUST BE A MAXIMUM OF 2 FEET APART AND DRIVEN INTO SOLID GROUND AT LEAST 18 INCHES.
   * PLACE HARDWARE CLOTH (WELDED GALVANIZED SCREEN WITH SQUARE 1/4 - 1/2-INCH HOLES) ON THE UPHILL SIDE OF THE POSTS TO HOLD THE WASHED STONE IN PLACE. PUT 6 INCHES OF THE BOTTOM OF THE CLOTH IN THE TRENCH AND FASTEN IT TO THE POSTS WITH LENGTHS OF WIRE.
   * BURY THE BOTTOM OF THE HARDWARE CLOTH, THE UPPER EDGE OF THE FILTER FABRIC BELOW THE OUTLET, AND THE WIRE FENCE IN THE TRENCH AND COMPACT THE FILL.
   * PLACE A FILTER OF 1-INCH DIAMETER WASHED STONE ON THE UPHILL SIDE OF THE OUTLET. PILE THE STONE UP TO THE TOP OF THE HARDWARE CLOTH AND OVER THE JOINT BETWEEN THE OUTLET AND THE SILT FENCE.

MAINTENANCE

MATERIALS, EQUIPMENT, AND PERSONNEL MUST BE AVAILABLE FOR MAINTENANCE AT ALL TIME.

1. INSPECT THE SILT FENCE OUTLET:

   * DURING CONSTRUCTION: TO DETERMINE IF MACHINERY, FALLING TREES, ETC. HAVE DAMAGED THE BARRIER, FENCE, OR OUTLET; IF DAMAGED, MAKE REPAIRS. TO SEE THAT FILL MATERIAL HAS NOT ACCUMULATED AGAINST THE OUTLET, BLOCKING OUTFLOW; IF IT HAS, REMOVE THE MATERIAL, REPAIR THE DAMAGE, AND MOVE THE FENCE OR FILL SO THAT IT DOES NOT HAPPEN AGAIN.
   * AFTER EACH RAINFALL: TO DETERMINE IF RUNOFF FLOWING THROUGH THE OUTLET HAS CAUSED DAMAGE BY UNDERMINING THE FENCE OR OUTLET, OR IF ACCUMULATED WATER HAS COLLAPSED THE OUTLET; IF IT HAS, MAKE REPAIRS OR INSTALL A SEDIMENT TRAP IF NECESSARY TO PREVENT FUTURE FAILURES.

2. CLEAN OUT ACCUMULATED SEDIMENT WHEN IT REACHES A DEPTH OF ONE-HALF THE HEIGHT OF THE OUTLET. PLACE THE SEDIMENT IN A DISPOSAL AREA, OR MIX IT WITH DRY SOIL ON THE SITE IF APPROPRIATE.

   DO NOT DISPOSE OF SEDIMENT IN A MANNER THAT WILL CREATE AN EROSION HAZARD.

3. WHEN THE STONE FILTER BECOMES CLOGGED, PREVENTING FLOW THROUGH THE FILTER, REMOVE THE CONTAMINATED STONE, DISPOSE OF IT PROPERLY, AND REPLACE IT WITH CLEAN WASHED STONE.

4. REPAIR THE OUTLET IF DAMAGED BY USE OR DURING MAINTENANCE. REBUILD IT TO THE ORIGINAL CONFIGURATION.

REMOVAL

1. WHEN GRADING IN THE DRAINAGE AREA ABOVE THE OUTLET HAS BEEN COMPLETED AND THE DISTURBED AREA SUFFICIENTLY STABILIZED TO RESTRAIN EROSION, THE OUTLET MUST BE REMOVED.

2. CLEAN OUT ACCUMULATED SEDIMENT AND DISPOSE OF IT PROPERLY.

3. REMOVE POSTS, FENCE, FABRIC, WIRE, AND WASHED STONE; DISPOSE OF THEM PROPERLY.

4. GRADE THE LOCATION AS NECESSARY.

5. STABILIZE THE DISTURBED AREA WHERE THE OUTLET WAS LOCATED.

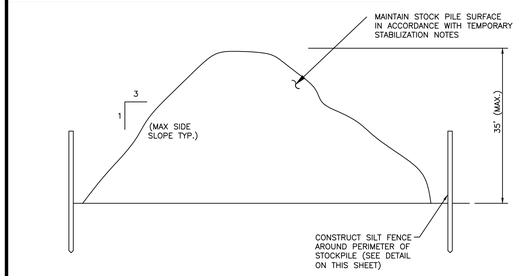

TEMPORARY STOCKPILE DETAIL

NOT TO SCALE

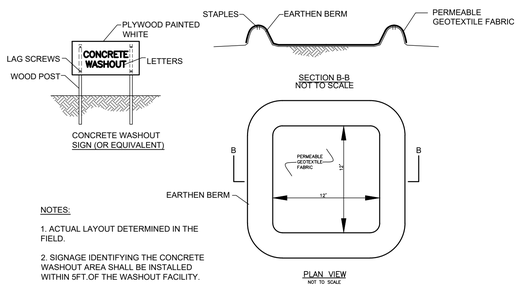

NOTES:

1. ACTUAL LAYOUT DETERMINED IN THE FIELD.

2. SIGNAGE IDENTIFYING THE CONCRETE WASHOUT AREA SHALL BE INSTALLED WITHIN 5FT.OF THE WASHOUT FACILITY.

CONCRETE WASHOUT

TYPE "ABOVE GRADE" WITH EARTHEN BERMS

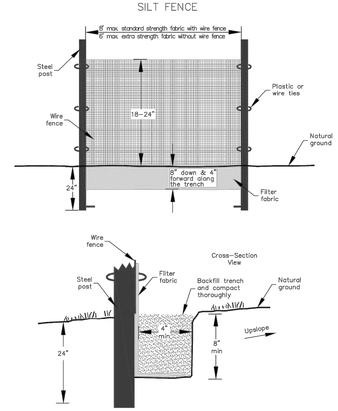

GENERAL NOTES:

1. Use silt fence only when drainage area does not exceed ¼ acre and never in areas of concentrated flow.
2. Silt fence shall not be removed unless site is stabilized and inspected by Town of Chapel Hill staff.

NOTE: DRAWING NOT TO SCALE

ENGINEERING DEPARTMENT STANDARD DETAILS

TITLE:	REVISIONS		DET. NO.
SILT FENCE	08/13	15	SD-18

SILT FENCE DETAIL

N.T.S.

Pennoni
Firm License F-1267
PENNONI ASSOCIATES INC.
5430 Wade Park Boulevard, #106
Raleigh, NC 27607
T 919.929.1173 F 919.493.6548

ALL DIMENSIONS MUST BE VERIFIED BY CONTRACTOR AND OWNER MUST BE NOTIFIED OF ANY DISCREPANCIES BEFORE PROCEEDING WITH WORK

NORTH CAROLINA PROFESSIONAL SEAL 047736 ENGINEER Eman S Mindrad

Preliminary

TARHEEL LODGING REDEVELOPMENT PHASE 2

1742 FORDHAM BLVD.
CHAPEL HILL, NC

EROSION AND SEDIMENTATION DETAILS

TARHEEL LODGING, LLC & UNICORN GROUP FIFTEEN, LLC

6110 FALCON BRIDGE ROAD
CHAPEL HILL, NC 27517

DATE	NO.	REVISIONS	BY

ALL DOCUMENTS PREPARED BY PENNONI ASSOCIATES ARE INSTRUMENTS OF SERVICE IN RESPECT OF THE PROJECT. THEY ARE NOT INTENDED OR REPRESENTED TO BE SUITABLE FOR REUSE BY OWNER OR OTHERS ON THE EXTENSIONS OF THE PROJECT OR ON ANY OTHER PROJECT. ANY REUSE WITHOUT WRITTEN VERIFICATION OR ADAPTATION BY PENNONI ASSOCIATES FOR THE SPECIFIC PURPOSE INTENDED WILL BE AT OWNERS SOLE RISK AND WITHOUT LIABILITY OR LEGAL EXPOSURE TO PENNONI ASSOCIATES; AND OWNER SHALL INDEMNIFY AND HOLD HARMLESS PENNONI ASSOCIATES FROM ALL CLAIMS, DAMAGES, LOSSES AND EXPENSES ARISING OUT OF OR RESULTING THEREFROM.

PROJECT	RKINV18001
DATE	2018/05/21
DRAWING SCALE	N.T.S.
DRAWN BY	CJJ
APPROVED BY	ESM

CS8502

U:\Accounts\RKINV\RKINV18001 - Hotel Site Chapel Hill\DESIGN_SHEETS\CS8502.dwg PLOTTED: 6/19/2023 11:40 AM BY: Jason Thibodeaux PLOTSTYLE: Pennoni.NCS.ctb PROJECT STATUS: ---

BLOCK AND GRAVEL FILTER

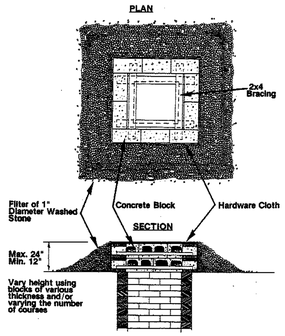

Figure 1: Illustration of a Block and Gravel Filter.

INSTRUCTIONS FOR STORM DRAIN INLET PROTECTION USING A

BLOCK AND GRAVEL FILTER

INSTALLATION

1. REFER TO THE PLANS FOR LOCATIONS AND SPECIFICATIONS. IF THERE ARE QUESTIONS OR PROBLEMS WITH THE LOCATION OR METHODS OF INSTALLATION, CONTACT THE ENGINEER, ARCHITECT, OR RESPONSIBLE PERSONNEL ON THE SITE FOR ASSISTANCE. EROSION CONTROL PERSONNEL HAVE COPIES OF INSTRUCTIONS AND MAY HAVE PHOTOGRAPHS OF PROPERLY INSTALLED BLOCK AND GRAVEL FILTERS AS AN AID TO INSTALLATION.

   IF THE INLET PROTECTION IS NOT INSTALLED CORRECTLY THE FIRST TIME, IT WILL HAVE TO BE REBUILT.

2. DETERMINE THE LOCATION ON THE GROUND, TAKING INTO CONSIDERATION:

   * DIVERSIONS AND/OR BERMS MUST BE USED TO FORCE RUNOFF THROUGH THE FILTER INTO THE INLET SO THAT IT DOES NOT BY-PASS THE INLET AND CAUSE PROBLEMS ELSEWHERE.

   * IF THE INLET IS TO BE RAISED IN STAGES AS THE FILL IS BROUGHT UP AROUND IT, THE FILTER MUST BE REMOVED FOR GRADING AND REPLACED IMMEDIATELY SO THAT THE INLET IS ALWAYS PROTECTED FROM THE ENTRY OF UNFILTERED RUNOFF.

3. REFER TO ILLUSTRATIONS IN THE PLAN TO ASSIST INSTALLATION.

4. PLACE CONCRETE BLOCKS AROUND THE OPENING OF THE INLET WITH THE HOLES IN THE BLOCK PARALLEL TO THE GROUND SO THAT WATER CAN FLOW THROUGH THE HOLES. VARY THE NUMBER OF COURSES TO BUILD THE FILTER TO THE REQUIRED HEIGHT. IT MUST BE AT LEAST 12 INCHES HIGH.

5. INSTALL 2 X 4'S AS SHOWN IN THE ILLUSTRATION FOR REINFORCEMENT.

6. WRAP HARDWARE CLOTH AROUND THE OUTSIDE OF THE BLOCKS AND ON THE GROUND. HARDWARE CLOTH IS WELDED, GALVANIZED WIRE FABRIC WITH 1/4 - 1/2-INCH SQUARE HOLES.

7. PILE CLEAN WASHED STONE (1-INCH DIAMETER) AROUND THE OUTSIDE OF THE BLOCKS AND ON TOP OF THE HARDWARE CLOTH.

8. WHERE POSSIBLE, DIG A SMALL PIT AROUND THE FILTER TO STORE SEDIMENT.

9. IT IS ADVISABLE TO PLACE GUARD STAKES AROUND THE FILTER TO ALERT MACHINERY OPERATORS OF ITS LOCATION AND PREVENT DAMAGE TO IT.

10. DIVERSIONS AND/OR BERMS MUST BE USED TO DIRECT RUNOFF TO THE FILTER AND INTO THE INLET. RUNOFF MUST NOT BE ALLOWED TO BY-PASS THE INLET AS IT WILL CREATE PROBLEMS DOWNHILL. REFER TO SPECIFIC DETAILS IN THE PLAN.

MAINTENANCE

MATERIALS, EQUIPMENT, AND PERSONNEL MUST BE AVAILABLE FOR MAINTENANCE AT ALL TIMES.

1. INSPECT THE BLOCK AND GRAVEL FILTER:

   * DURING CONSTRUCTION: TO SEE IF MACHINERY OR CONSTRUCTION ACTIVITY HAVE DAMAGED THE FILTER; IF DAMAGED, REPAIR IT. TO SEE IF CONSTRUCTION TRAFFIC HAS DAMAGED OR REDUCED THE CAPACITY OF THE BERMS AND DIVERSIONS DIRECTING RUNOFF TO THE FILTER; IF SO, MAKE REPAIRS.

   * AFTER EACH RAINFALL: TO SEE IF RUNOFF IS BY-PASSING THE INLET OR TOPPING THE BERMS OR DIVERSIONS BELOW THE FILTER; IF SO, INCREASE THEIR CAPACITY TO PREVENT IT.

2. WHEN THE STONE FILTER BECOMES COVERED WITH SEDIMENT AND CLOGGED SO THAT RUNOFF CANNOT FLOW THROUGH IT, THE CONTAMINATED STONE MUST BE REMOVED, DISPOSED OF PROPERLY, AND REPLACED WITH CLEAN WASHED STONE.

   DO NOT DISPOSE OF SEDIMENT IN A MANNER THAT WILL CREATE AN EROSION HAZARD.

3. IF THE FILTER IS DAMAGED, IF THE BLOCKS ARE DISLOCATED OR BROKEN, OR IF THE REINFORCEMENT IS DAMAGED, REBUILD THE FILTER TO ITS ORIGINAL DESIGN CONFIGURATION.

REMOVAL

1. WHEN GRADING IN THE DRAINAGE AREA ABOVE THE INLET HAS BEEN FINISHED AND THE DISTURBED AREAS STABILIZED, THE BLOCK AND GRAVEL FILTER MUST BE REMOVED.

2. REMOVE ANY ACCUMULATED SEDIMENT AND DISPOSE OF IT PROPERLY.

3. REMOVE THE STONE, HARDWARE CLOTH, BLOCK, AND 2 X 4'S, AND DISPOSE OF THEM PROPERLY.

4. STABILIZE THE DISTURBED AREA AS REQUIRED.

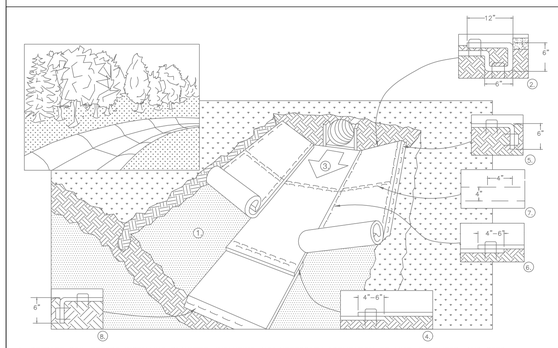

1. PREPARE SOIL BEFORE INSTALLING BLANKETS, INCLUDING ANY NECESSARY APPLICATION OF LIME, FERTILIZER, AND SEED.
2. BEGIN AT THE TOP OF THE CHANNEL BY ANCHORING THE BLANKET IN A 6" DEEP X 6" WIDE TRENCH WITH APPROXIMATELY 12" OF BLANKET EXTENDED BEYOND THE UP-SLOPE PORTION OF THE TRENCH. ANCHOR THE BLANKET WITH A ROW OF STAPLES/STAKES APPROXIMATELY 12"APART IN THE BOTTOM OF THE TRENCH. BACKFILL AND COMPACT THE TRENCH AFTER STAPLING. APPLY SEED TO COMPACTED SOIL AND FOLD REMAINING 12"PORTION OF BLANKET BACK OVER SEED AND COMPACTED SOIL. SECURE BLANKET OVER COMPACTED SOIL WITH A ROW OF STAPLES/STAKES SPACED APPROXIMATELY 12" APART ACROSS THE WIDTH OF THE BLANKET.
3. ROLL CENTER BLANKET IN DIRECTION OF WATER FLOW IN BOTTOM OF CHANNEL. BLANKETS WILL UNROLL WITH APPROPRIATE SIDE AGAINST THE SOIL SURFACE. ALL BLANKETS MUST BE SECURELY FASTENED TO SOIL SURFACE BY PLACING STAPLES/STAKES IN APPROPRIATE LOCATIONS AS PER MANUFACTURER'S RECOMMENDATIONS.
4. PLACE CONSECUTIVE BLANKETS END OVER END (SHINGLE STYLE) WITH A 4"-6" OVERLAP. USE A DOUBLE ROW OF STAPLES STAGGERED 4" APART AND 4" ON CENTER TO SECURE BLANKETS.
5. FULL LENGTH EDGE OF BLANKETS AT TOP OF SIDE SLOPES MUST BE ANCHORED WITH A ROW OF STAPLES/STAKES APPROXIMATELY 12" APART IN A 6" DEEP X 6" WIDE TRENCH. BACKFILL AND COMPACT THE TRENCH AFTER STAPLING.
6. ADJACENT BLANKETS MUST BE OVERLAPPED APPROXIMATELY 4"-6" (DEPENDING ON BLANKET TYPE) AND STAPLED. TO ENSURE PROPER SEAM ALIGNMENT, PLACE THE EDGE OF THE OVERLAPPING BLANKET (BLANKET BEING INSTALLED ON TOP) EVEN WITH THE SEAM STITCH ON THE BLANKET BEING OVERLAPPED.
7. IN HIGH FLOW CHANNEL APPLICATIONS, A STAPLE CHECK SLOT IS RECOMMENDED AT 30 TO 40 FOOT (9m-12m) INTERVALS. USE A DOUBLE ROW OF STAPLES STAGGERED 4" APART AND 4" ON CENTER OVER ENTIRE WIDTH OF THE CHANNEL.
8. THE TERMINAL ENDS OF THE BLANKETS MUST BE ANCHORED WITH A ROW OF STAPLES/STAKES APPROXIMATELY 12" (30cm) APART IN A 6" DEEP X 6" WIDE TRENCH. BACKFILL AND COMPACT THE TRENCH AFTER STAPLING.
9. PLACE STAPLE/STAKES PER MANUFACTURER'S RECOMMENDATION FOR THE APPROPRIATE CHANNEL FLOW OR SHORELINE APPLICATION

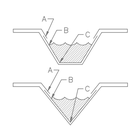

CRITICAL POINTS

A. OVERLAPS AND SEAMS
B. PROJECTED WATER LINE
C. CHANNEL BOTTOM/SIDE SLOPE VERTICES

NOTE:

1. HORIZONTAL STAPLE SPACING SHOULD BE ALTERED IF NECESSARY TO ALLOW STAPLES TO SECURE THE CRITICAL POINTS ALONG THE CHANNEL SURFACE.
2. IN LOOSE SOIL CONDITIONS, THE USE OF STAPLE OR STAKE LENGTHS GREATER THAN 6" MAY BE NECESSARY TO PROPERLY ANCHOR THE BLANKETS.
3. FOLLOW EROSION CONTROL TECHNOLOGY COUNCIL SPECIFICATION FOR PRODUCT SELECTION.

EROSION CONTROL LINING (CHANNEL INSTALLATION)

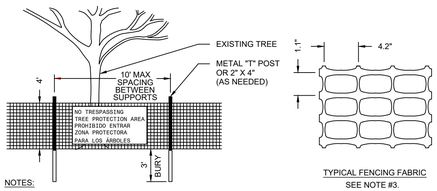

TYPICAL FENCING FABRIC
SEE NOTE #3.

NOTES:

1. PLACE CONTINUOUS RUN OF FENCE MATERIAL AS SHOWN ON PLANS.
2. ATTACH AT 10' MAXIMUM INTERVALS TO 2x4 POSTS. DO NOT STAPLE TO TREES.
3. FENCE MATERIAL SHALL BE 'TENSAR' HIGH STRENGTH POLYMER GEOGRID FABRIC BY TENSAR CORPORATION, MORROW, GEORGIA, OR EQUAL, BRIGHT ORANGE COLOR.
4. AT 100' O.C., PLACE SIGNS IN ENGLISH AND SPANISH: "NO TRESPASSING - TREE PROTECTION AREA" and "PROHIBIDO ENTRAR - ZONA PROTECTORA PARA LOS ARBOLES"
5. A PRE-CONSTRUCTION CONFERENCE SHALL BE HELD WITH THE PROJECT MANAGER AND THE TOWN'S LANDSCAPE ARCHITECT BEFORE ANY SITE WORK BEGINS.
6. ANY TREE ROOTS EXPOSED BY CONSTRUCTION SHALL BE SEVERED CLEANLY WITH A PRUNING TOOL.
7. THE SOIL WITHIN THE PROTECTED AREA AROUND EXISTING TREES SHALL NOT BE DRIVEN UPON AFTER FENCE REMOVAL FOR THE PURPOSE OF INSTALLING LANDSCAPING.

TREE PROTECTION FENCE
N.T.S.

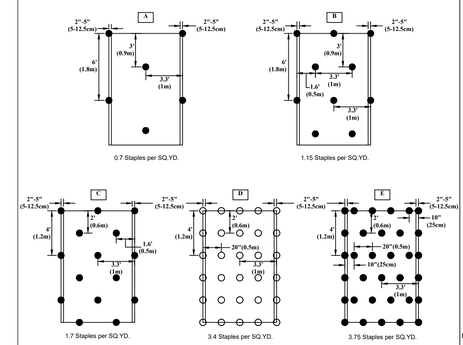

STAPLE PATTERN GUIDE

- 4:1 Slopes (A)
- 3:1 Slopes (B)
- 2:1 Slopes (C)
- 1:1 & Steeper Slopes (D)
- Medium/High Flow Channel (D)
- High Flow Channel And Shoreline (E)

NOTES:

* Use ECMDS® for more accurate staple pattern selection.

NORTH AMERICAN GREEN
5401 St. Wendel - Cynthiana Rd.
Poseyville, IN 47633
PH: 800-772-2040
www.nagreen.com

Disclaimer:
The information presented herein is general design information only. For specific applications, consult an independent professional for further design guidance.

Drawn on: 8-4-17

STAPLE PATTERN
N.T.S.

Pennoni
Firm License F-1267
PENNONI ASSOCIATES INC.
5430 Wade Park Boulevard, #106
Raleigh, NC 27607
T 919.929.1173 F 919.493.6548

ALL DIMENSIONS MUST BE VERIFIED BY CONTRACTOR AND OWNER MUST BE NOTIFIED OF ANY DISCREPANCIES BEFORE PROCEEDING WITH WORK

NORTH CAROLINA PROFESSIONAL SEAL 047736 ENGINEER Shan S Mindrup
Preliminary

TARHEEL LODGING REDEVELOPMENT PHASE 2
1742 FORDHAM BLVD.
CHAPEL HILL, NC

EROSION AND SEDIMENTATION DETAILS

TARHEEL LODGING, LLC & UNICORN GROUP FIFTEEN, LLC
6110 FALCON BRIDGE ROAD
CHAPEL HILL, NC 27517

DATE	NO.	REVISIONS	BY

ALL DOCUMENTS PREPARED BY PENNONI ASSOCIATES ARE INSTRUMENTS OF SERVICE IN RESPECT OF THE PROJECT. THEY ARE NOT INTENDED OR REPRESENTED TO BE SUITABLE FOR REUSE BY OWNER OR OTHERS ON THE EXTENSIONS OF THE PROJECT OR ON ANY OTHER PROJECT. ANY REUSE WITHOUT WRITTEN VERIFICATION OR ADAPTATION BY PENNONI ASSOCIATES FOR THE SPECIFIC PURPOSE INTENDED WILL BE AT OWNERS SOLE RISK AND WITHOUT LIABILITY OR LEGAL EXPOSURE TO PENNONI ASSOCIATES; AND OWNER SHALL INDEMNIFY AND HOLD HARMLESS PENNONI ASSOCIATES FROM ALL CLAIMS, DAMAGES, LOSSES AND EXPENSES ARISING OUT OF OR RESULTING THEREFROM.

PROJECT	RKINV18001
DATE	2018/05/21
DRAWING SCALE	N.T.S.
DRAWN BY	CJJ
APPROVED BY	ESM

CS8503

SHEET 39 OF 39

U:\Accounts\RKINV\RKINV18001 - Hotel Site Chapel Hill\DESIGN_SHEETS\CS8503.dwg PLOTTED: 6/19/2023 11:40 AM BY: Jason Thibodeaux PLOTSTYLE: Pennoni.NCS.ctb PROJECT STATUS: —