CONCEPT PLAN AND REZONING
FOR
PEACH APARTMENTS

107 & 107 A/B JOHNSON STREET
CHAPEL HILL, NORTH CAROLINA
PIN: 9788-03-2946, 9788-03-0899 & 9788-03-0940
DATE: DECEMBER 26, 2020
-

Sheet List Table	
Sheet Number	Sheet Title
C-1	COVER SHEET
C-2	AREA MAP
C-3	EXISTING CONDITIONS PLAN
C-4	DEMOLITION PLAN
C-5	SITE PLAN
C-6	GRADING& DRAINAGE PLAN
C-7	EROSION CONTROL PLAN
D-1	SITE DETAILS
D-2	SITE DETAILS
C	SITE PLAN SKETCH

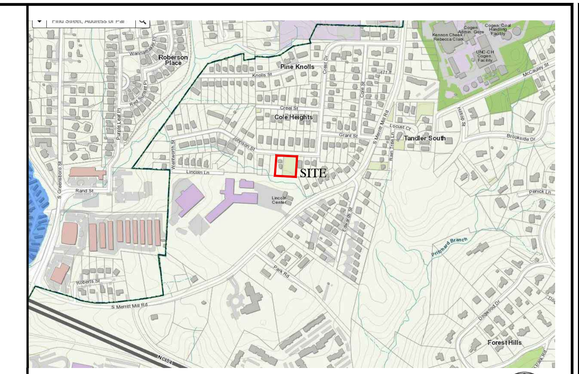

SITE LOCATION MAP
NTS

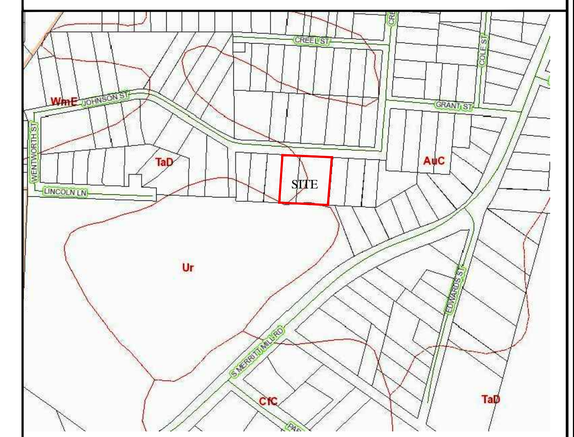

SOILS MAP
NTS

NOTES:

1. ALL NEW UTILITIES SHALL BE LOCATED UNDERGROUND THROUGHOUT THE SITE AS ALLOWED BY LOCAL CODES, UNLESS OTHERWISE SHOWN ON PLANS.
2. ALL PUBLIC UTILITIES AND CONNECTIONS TO PUBLIC UTILITIES SHALL CONFORM TO THE TOWN OF CHAPEL HILL STANDARDS AND SPECIFICATIONS.
3. THE CONTRACTOR IS RESPONSIBLE FOR OBTAINING ANY PERMITS NECESSARY FOR CONSTRUCTION.
4. THE CONTRACTOR SHALL BE RESPONSIBLE FOR COORDINATION OF THE LOCATION AND/OR RELOCATION OF ALL EXISTING UTILITIES WITH THE APPROPRIATE UTILITY, AGENCY OR COMPANY.
5. THE CONTRACTOR SHALL COORDINATE ALL UTILITY CONNECTIONS AND DISTURBANCES WITH EXISTING USERS.THE TOWN OF CHAPEL HILL AND APPROPRIATE UTILITY COMPANIES SO THAT ANY SERVICE INTERRUPTIONS ARE MINIMAL.
6. UTILITY CONNECTIONS FOR BUILDING PLUMBING LINES SHALL BE COORDINATED BY CONTRACTOR. LOCATIONS, BOTH HORIZONTAL AND VERTICAL, SHALL BE VERIFIED PRIOR TO BEGINNING THEIR CONSTRUCTION.
7. SEWER CLEANOUTS IN PAVED AREAS SHALL BE TRAFFIC BEARING.

811 Know what's below. Call before you dig.

CONTRACTOR SHALL NOTIFY "NC811" (811) OR (1-800-632-4949) AT LEAST 3 FULL BUSINESS DAYS PRIOR TO BEGINNING CONSTRUCTION OR EXCAVATION TO HAVE EXISTING UTILITIES LOCATED. CONTRACTOR SHALL CONTACT ANY LOCAL UTILITIES THAT PROVIDE THEIR OWN LOCATOR SERVICES INDEPENDENT OF "NC811". REPORT ANY DISCREPANCIES TO THE ENGINEER IMMEDIATELY.

DEVELOPMENT INFORMATION

NET LAND AREA = 29,258 SF (0.67 AC)

GROSS LAND AREA = 32,184 SF (0.74 AC)

EXISTING ZONING = R-3

PROPOSED ZONING = R-SS-C

PROPOSED AFFORDABLE DWELLING UNITS: 10 UNITS
(2) EFFICIENCIES; (4) ONE BEDROOM; (3) TWO BEDROOM; (1) THREE BEDROOM

PROPOSED FLOOR AREA = 7,697 SF

LUMO PARKING: 14.5 SPACES
PROPOSED PARKING: 9 REGULAR
2 ACCESSIBLE
2 OVERFLOW
13 TOTAL SPACES
BICYCLE PARKING: 2 SPACES

PROPOSED AMENITIES: PLAYGROUND; GAZEBO; COMMUNITY GARDEN

PROPOSED STORMWATER CONTROL MEASURE: RAIN GARDEN

PROPOSED DISTURBED AREA = 22,998 SF (0.528 AC)

EXISTING IMPERVIOUS AREA = 5,141 SF (0.118 AC)

PROPOSED IMPERVIOUS AREA = 11,614 SF (0.27 AC)

NET NEW IMPERVIOUS SURFACE = 6,437 SF (0.148 AC)

CIVIL ENGINEER
PHILIP POST ENGINEERING, INC.
PHILIP N. POST, PE, PLS
PO BOX 4912
CHAPEL HILL, N.C. 27515
TEL. (919) 818-7862
philip.n.post@gmail.com

ARCHITECT
JOSH GURLITZ
JGA ARCHITECTS
308 W. ROSEMARY ST, SUITE 302
CHAPEL HILL, NC 27516
TEL. (919) 537-5875
josh@joshgurlitz.com

OWNER
DELORES BAILEY
EMPOWERMENT, INC.
109 N. GRAHAM ST, SUITE 200
CHAPEL HILL, NC 27514
TEL. (919) 967-8779
delores.bailey@gmail.com

PRELIMINARY NOT FOR CONSTRUCTION

7			
6			
5			
4			
3			
2			
1			
	REVISIONS	DATE	BY

PROJECT ENGINEER
PNP
CHECKED BY
PNP
DRAWN BY
DC
FIRST ISSUE DATE
12-26-2020

Philip Post Engineering, Inc. 2020 This drawing is the property of Philip Post Engineering, Inc. and is not to be reproduced or copied in whole or in part. It is only to be used for the project and for the use specified in writing and is not to be used on any other project or site. It is to be returned upon the written request of Philip Post Engineering, Inc.COPYRIGHT 2020

Philip N. Post, PE, PLS
(919) 818-7862
philip.n.post@gmail.com
PO Box 4912
Chapel Hill, NC 27515
PHILIP POST ENGINEERING
FIRM: C-347

CONCEPT PLAN AND REZONING
PEACH APARTMENTS
107 & 107-A/B JOHNSON STREET - PIN: 9788-03-2946, 9788-03-0899 & 9788-03-0940
CHAPEL HILL, NORTH CAROLINA

COVER SHEET

PROJECT NO.
PEACH
DRAWING NAME:
PEACH_CS.dwg
SHEET NO.
C-1

7			
6			
5			
4			
3			
2			
1		–	–
	REVISIONS	DATE	BY

PROJECT ENGINEER
PNP

CHECKED BY
PNP

DRAWN BY
DC

FIRST ISSUE DATE
12-28-2020

Philip Post Engineering, Inc. 2020. This drawing is the property of Philip Post Engineering, Inc. and is not to be reproduced or copied in whole or in part. It is only to be used for the project and for the purpose for which it was provided and is not to be used on any other project or site. It is to be returned upon the written request of Philip Post Engineering, Inc.COPYRIGHT 2020

PHILIP POST ENGINEERING
FIRM: C-347

Philip N. Post, PE, PLS
(919) 818-7862
philip.n.post@gmail.com

PO Box 4912
Chapel Hill, NC 27515

CONCEPT PLAN AND REZONING
PEACH APARTMENTS
107 & 107-A/B JOHNSON STREET - PIN: 9788-03-2946, 9788-03-0899 & 9788-03-0940
CHAPEL HILL, NORTH CAROLINA

AREA MAP

PROJECT NO.
PEACH

DRAWING NAME:
AREA MAP.dwg

SHEET NO.
C-2

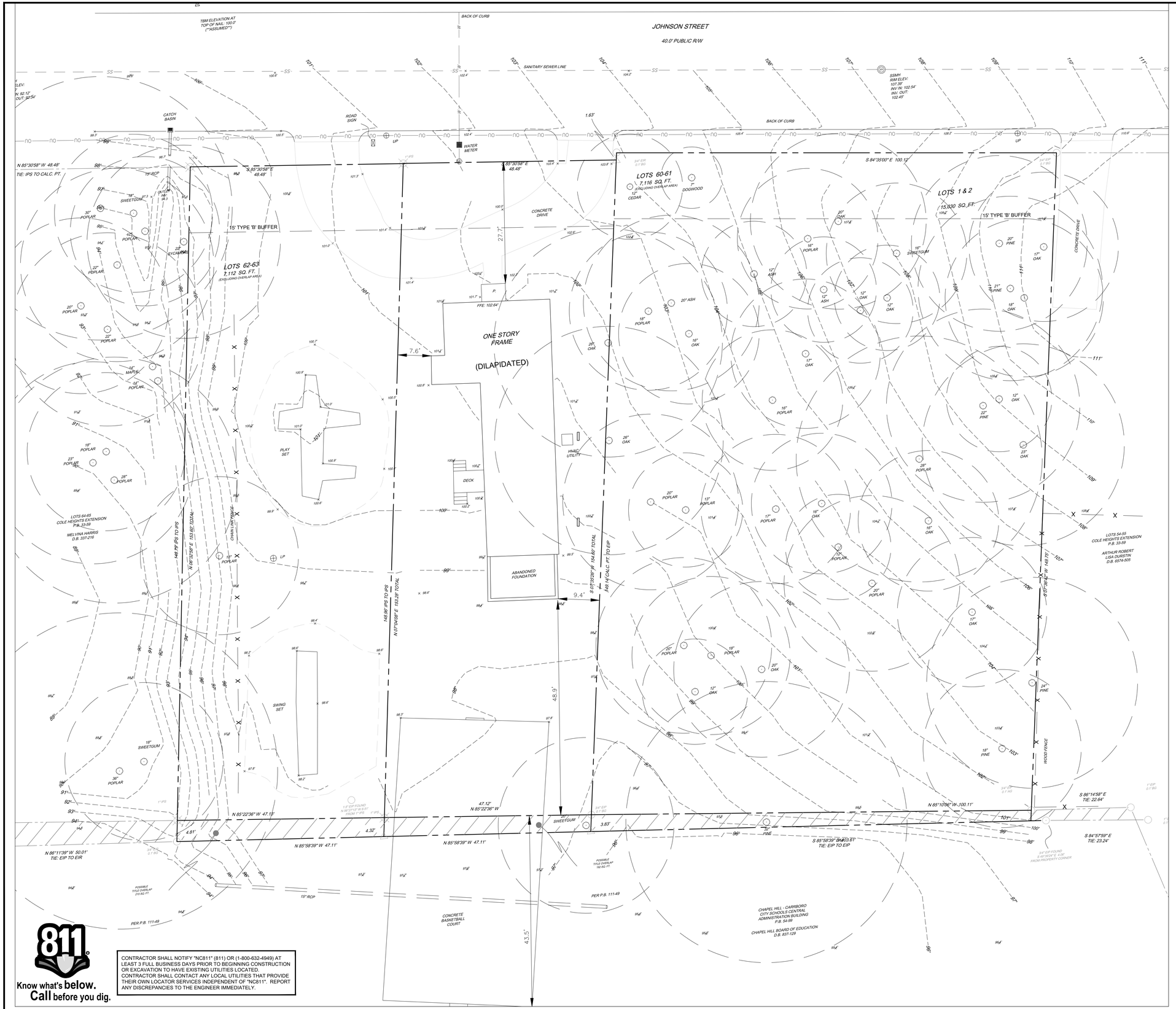

LEGEND

- TELEPHONE PEDESTAL
- CONTROLLER CABINET
- CURB INLET
- DROP INLET
- LIGHT POLE
- WATER METER
- WATER VALVE
- TRAFFIC SIGNAL BOX
- EXISTING SEWER MANHOLE
- CLEAN OUT
- FIRE HYDRANT
- POWER/LIGHT POLE
- GUY WIRE
- EXISTING MONUMENT FOUND
- IRON ROD OR PIPE
- CONCRETE MONUMENT SET
- CONCRETE MONUMENT
- SD — EXISTING PIPE/CULVERT
- W — EXISTING WATER LINE
- SS — EXISTING SANITARY SEWER LINE
- T — EXISTING TELEPHONE
- G — EXISTING GAS LINE
- OHE — EXISTING OVERHEAD UTILITY
- UGE — EXISTING UNDERGROUND UTILITY
- EXISTING WOODS LINE
- LD — LIMITS OF DISTURBANCE LINE

GRAPHIC SCALE

5 0 2.5 5 10 20

(IN FEET)
1 inch = 10 ft.

811
Know what's **below.**
Call before you dig.

CONTRACTOR SHALL NOTIFY "NC811" (811) OR (1-800-632-4949) AT LEAST 3 FULL BUSINESS DAYS PRIOR TO BEGINNING CONSTRUCTION OR EXCAVATION TO HAVE EXISTING UTILITIES LOCATED. CONTRACTOR SHALL CONTACT ANY LOCAL UTILITIES THAT PROVIDE THEIR OWN LOCATOR SERVICES INDEPENDENT OF "NC811". REPORT ANY DISCREPANCIES TO THE ENGINEER IMMEDIATELY.

REVISIONS		
1	–	–
2	–	–
3		
4		
5		
6		
7		
	DATE	BY

PROJECT ENGINEER
PNP
CHECKED BY
PNP
DRAWN BY
DC
FIRST ISSUE DATE
12-28-2020

Philip Post Engineering, Inc. 2020 This drawing is the property of Philip Post Engineering, Inc. and is not to be used for the project and for the use specified herein in whole or in part. It is only to be used for the project or site. It is to be returned upon the written request of Philip Post Engineering, Inc.COPYRIGHT 2020

Philip N. Post, PE, PLS
(919) 818-7862
philip.n.post@gmail.com
PO Box 4912
Chapel Hill, NC 27515
PHILIP POST ENGINEERING
FIRM: C-347

CONCEPT PLAN AND REZONING
PEACH APARTMENTS
107 & 107-A/B JOHNSON STREET - PIN: 9788-03-2946, 9788-03-0899 & 9788-03-0940
CHAPEL HILL, NORTH CAROLINA

EXISTING CONDITIONS PLAN

PROJECT NO.
PEACH
DRAWING NAME:
PEACH_XC.dwg
SHEET NO.
C-3

JOHNSON STREET

40.0' PUBLIC R/W

LOTS 62-63
7,112 SQ. FT.
(EXILLUDING OVERLAP AREA)

LOTS 60-61
7,116 SQ. FT.
(EXILLUDING OVERLAP AREA)

LOTS 1 & 2
15,030 SQ. FT.

ONE STORY FRAME (DILAPIDATED)

ABANDONED FOUNDATION

DEMO EX. C&G TO NEAREST JOINT

DEMO TO BOC

DEMO EX. PLAY SET

DEMO EX. SWING SET

DEMO EX. CONCRETE

SAW CUT EX. CONC.

CONCRETE DRIVE

CONCRETE BASKETBALL COURT

CHAPEL HILL - CARRBORO CITY SCHOOLS CENTRAL ADMINISTRATION BUILDING P.B. 54-99

CHAPEL HILL BOARD OF EDUCATION D.B. 837-129

LOTS 64-65 COLE HEIGHTS EXTENSION P.B. 23-59

MELVINA HARRIS D.B. 337-216

LOTS 54-55 COLE HEIGHTS EXTENSION P.B. 33-59

ARTHUR ROBERT LISA DURSTIN D.B. 6374-505

N 85°30'58" W 48.48'

TIE: IPS TO CALC. PT.

S 85°30'58" E 48.48'

S 84°35'00" E 100.12'

N 85°22'36" W 47.18'

N 85°58'39" W 47.11'

N 85°11'39" W 50.01'

TIE: EIP TO EIR

N 85°10'06" W 100.11'

S 86°14'58" E

TIE: 22.64'

S 84°57'59" E

TIE: 23.24'

S 85°58'39" E 103.81'

TIE: EIP TO EIP

S 07°32'36" W 154.50' TOTAL

148.14' CALC PT. TO EIP

N 07°34'08" E 153.28' TOTAL

148.86' IPS TO IPS

148.79' IPS TO IPS

N 08°32'36" E 155.60' TOTAL

7.6'

9.4'

48.9'

43.5'

LEGEND

- TELEPHONE PEDESTAL
- CONTROLLER CABINET
- CURB INLET
- DROP INLET
- LIGHT POLE
- WATER METER
- WATER VALVE
- TRAFFIC SIGNAL BOX
- EXISTING SEWER MANHOLE
- CLEAN OUT
- FIRE HYDRANT
- POWER/LIGHT POLE
- GUY WIRE
- EXISTING MONUMENT FOUND
- IRON ROD OR PIPE
- CONCRETE MONUMENT SET
- CONCRETE MONUMENT
- EXISTING PIPE/CULVERT
- EXISTING WATER LINE
- EXISTING SANITARY SEWER LINE
- EXISTING TELEPHONE
- EXISTING GAS LINE
- EXISTING OVERHEAD UTILITY
- EXISTING UNDERGROUND UTILITY
- EXISTING WOODS LINE
- LIMITS OF DISTURBANCE LINE

GRAPHIC SCALE

50 0 25 50 100 200

(IN FEET)

1 inch = 100 ft.

Know what's **below.**
Call before you dig.

CONTRACTOR SHALL NOTIFY "NC811" (811) OR (1-800-632-4949) AT LEAST 3 FULL BUSINESS DAYS PRIOR TO BEGINNING CONSTRUCTION OR EXCAVATION TO HAVE EXISTING UTILITIES LOCATED. CONTRACTOR SHALL CONTACT ANY LOCAL UTILITIES THAT PROVIDE THEIR OWN LOCATOR SERVICES INDEPENDENT OF "NC811". REPORT ANY DISCREPANCIES TO THE ENGINEER IMMEDIATELY.

	REVISIONS	DATE	BY
7		-	
6		-	
5		-	
4		-	
3		-	
2		-	
1		-	

PROJECT ENGINEER
PNP

CHECKED BY
PNP

DRAWN BY
DC

FIRST ISSUE DATE
12-28-2020

Philip Post Engineering, Inc. 2020 This drawing is the property of Philip Post Engineering, Inc. and is not to be reproduced or used in whole or in part. It is only to be used for the project and for the purpose indicated on this drawing and is not to be used on any other project or site. It is to be returned upon the written request of Philip Post Engineering, Inc.COPYRIGHT 2020

Philip N. Post, PE, PLS
(919) 818-7862
philip.n.post@gmail.com
PO Box 4912
Chapel Hill, NC 27515
PHILIP POST ENGINEERING
FIRM: C-347

CONCEPT PLAN AND REZONING
PEACH APARTMENTS
107 & 107-A/B JOHNSON STREET - PIN: 9788-03-2946, 9788-03-0899 & 9788-03-0940
CHAPEL HILL, NORTH CAROLINA

DEMOLITION PLAN

PROJECT NO.
PEACH

DRAWING NAME:
PEACH_DEM.dwg

SHEET NO.
C-4

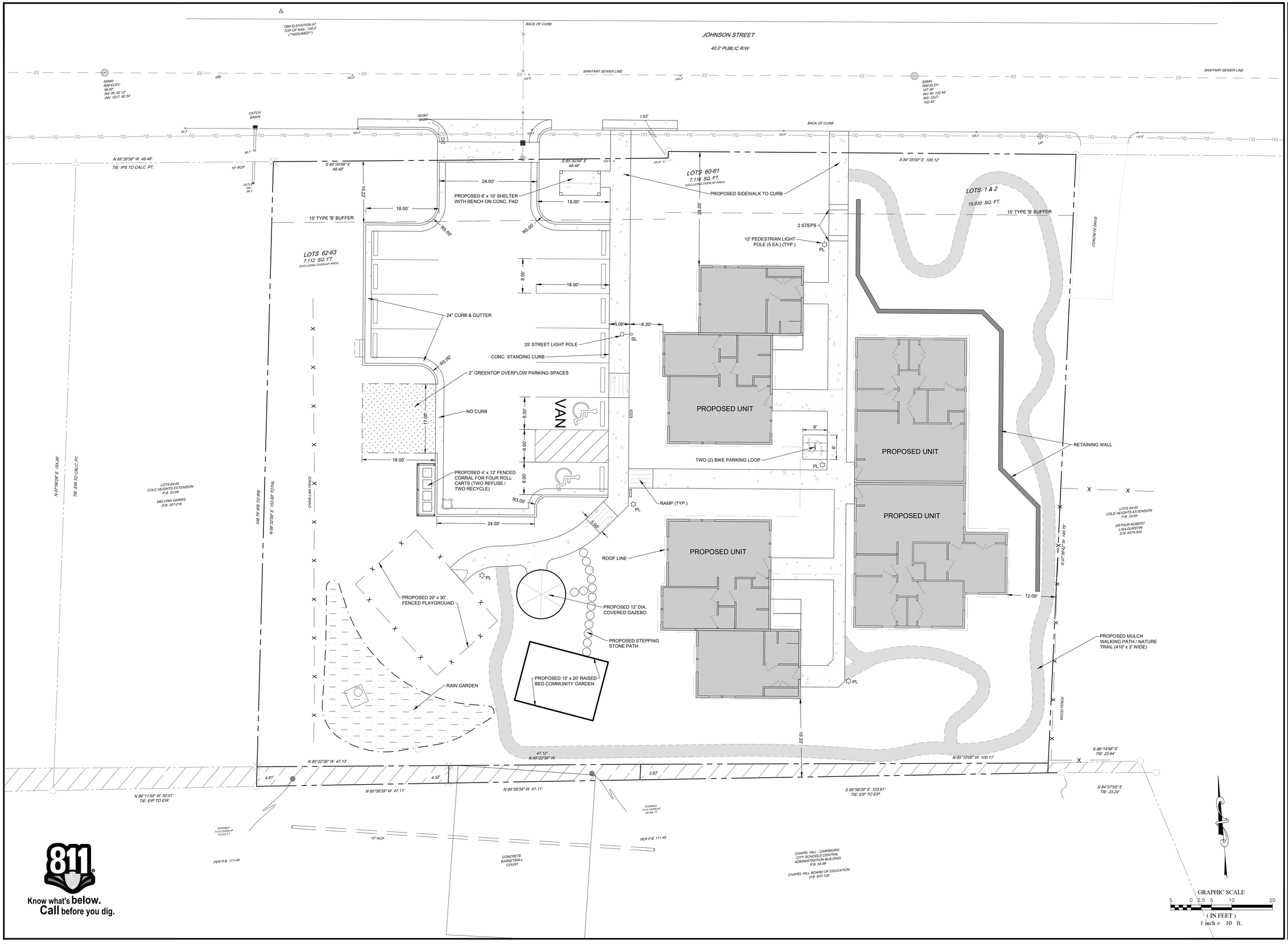

7			
6			
5			
4			
3			
2		–	–
1		–	–
	REVISIONS	DATE	BY

PROJECT ENGINEER
PNP

CHECKED BY
PNP

DRAWN BY
DC

FIRST ISSUE DATE
12-28-2020

Philip Post Engineering, Inc. 2020 This drawing is the property of Philip Post Engineering, Inc. and is not to be reproduced, or copied in whole or in part. It is only to be used for the project and for the date specifically indicated herein and is not to be used on any other project or site. It is to be returned upon the written request of Philip Post Engineering, Inc.COPYRIGHT 2020

PHILIP POST ENGINEERING
FIRM: C 347

Philip N. Post, PE, PLS
(919) 818-7862
philip.n.post@gmail.com

PO Box 4912
Chapel Hill, NC 27515

CONCEPT PLAN AND REZONING
PEACH APARTMENTS
107 & 107-A/B JOHNSON STREET - PIN: 9788-03-2946, 9788-03-0899 & 9788-03-0940
CHAPEL HILL, NORTH CAROLINA

SITE PLAN

PROJECT NO.
PEACH

DRAWING NAME:
SITE PLAN.dwg

SHEET NO.
C-5

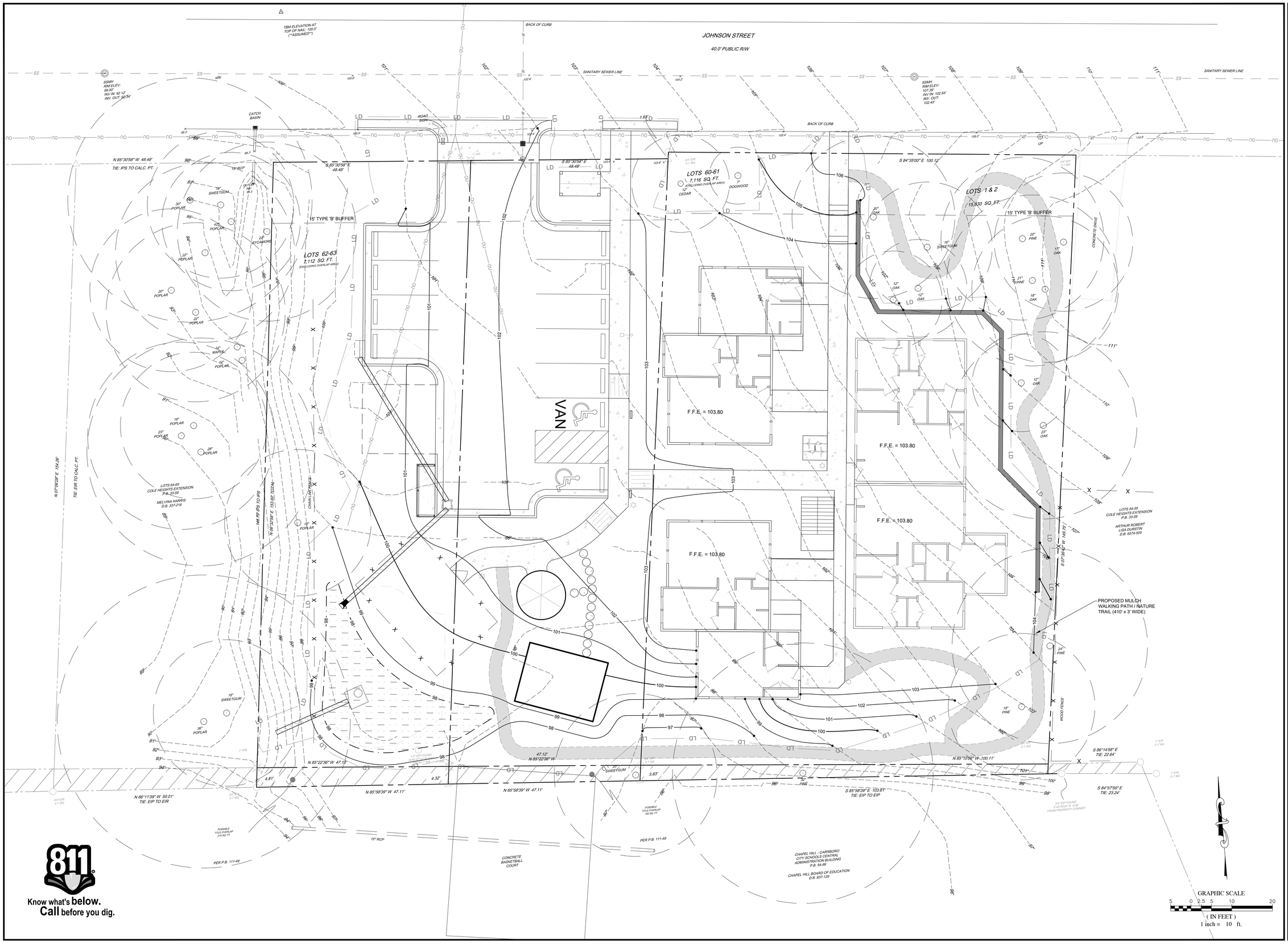

Know what's **below.**
Call before you dig.

7			
6			
5			
4			
3			
2			
1			
	REVISIONS	DATE	BY

PROJECT ENGINEER
PNP

CHECKED BY
PNP

DRAWN BY
DC

FIRST ISSUE DATE
12-28-2020

Philip Post Engineering, Inc. 2020 This drawing is the property of Philip Post Engineering, Inc. and is not to be reproduced or copied in whole or in part. It is only to be used for the project and for the specific purpose shown hereon and is not to be used on any other project or site. It is to be returned upon the written request of Philip Post Engineering, Inc.COPYRIGHT 2020

PHILIP POST ENGINEERING
FIRM: C-347

Philip N. Post, PE, PLS
(919) 818-7862
philip.n.post@gmail.com

PO Box 4912
Chapel Hill, NC 27515

CONCEPT PLAN AND REZONING
PEACH APARTMENTS
107 & 107-A/B JOHNSON STREET , PIN: 9788-03-2946, 9788-03-0899 & 9788-03-0940
CHAPEL HILL , NORTH CAROLINA

GRADING& DRAINAGE PLAN

PROJECT NO.
PEACH

DRAWING NAME:
PEACH_G.dwg

SHEET NO.
C-6

JOHNSON STREET

40.0' PUBLIC R/W

GRAVEL CONSTRUCTION ENTRANCE

15' TYPE 'B' BUFFER

LOTS 62-63
7,112 SQ. FT.
(EXCLUDING OVERLAP AREA)

LOTS 60-61
7,116 SQ. FT.
(EXCLUDING OVERLAP AREA)

LOTS 1 & 2
15,030 SQ. FT.

ONE STORY FRAME
(DILAPIDATED)

DIVERSION DITCH

TEMPORARY SEDIMENT BASIN DURING CONSTRUCTION

SKIMMER

SFO

EROSION CONTROL LEGEND:

EXIST / PROPOSED

- CURB INLET
- DROP INLET
- JUNCTION BOX
- FLARED END SECTION (FES)
- IP — CATCH BASIN INLET PROTECTION
- IP — ROCK PIPE INLET PROTECTION
- SFO — SILT FENCE OUTLET
- TCD — TEMPORARY CHECK DAM
- SW — STRAW WATTLES
- CE — CONSTRUCTION ENTRANCE / EXIT
- EXISTING STORM PIPE
- PROPOSED STORM PIPE
- LD — LIMITS OF DISTURBANCE
- TF — TREE PROTECTION FENCE
- SF — SILT FENCE
- DIVERSION DITCH
- 100 — EXISTING MAJOR CONTOUR
- 99 — EXISTING MINOR CONTOUR
- 100 — PROPOSED MAJOR CONTOUR
- 99 — PROPOSED MINOR CONTOUR

GRAPHIC SCALE

50 0 25 50 100 200

(IN FEET)
1 inch = 100 ft.

Know what's below. Call before you dig.

CONTRACTOR SHALL NOTIFY "NC811" (811) OR (1-800-632-4949) AT LEAST 3 FULL BUSINESS DAYS PRIOR TO BEGINNING CONSTRUCTION OR EXCAVATION TO HAVE EXISTING UTILITIES LOCATED. CONTRACTOR SHALL CONTACT ANY LOCAL UTILITIES THAT PROVIDE THEIR OWN LOCATOR SERVICES INDEPENDENT OF "NC811". REPORT ANY DISCREPANCIES TO THE ENGINEER IMMEDIATELY.

7			
6			
5			
4			
3			
2		–	–
1		–	–
	REVISIONS	DATE	BY

PROJECT ENGINEER
PNP

CHECKED BY
PNP

DRAWN BY
DC

FIRST ISSUE DATE
12-28-2020

Philip Post Engineering, Inc. 2020 This drawing is the property of Philip Post Engineering, Inc. and is not to be reproduced or copied in whole or in part. It is only to be used for the project and for the use described and shown herein and is not to be used on any other project or site. It is to be returned upon the written request of Philip Post Engineering, Inc.COPYRIGHT 2020

Philip N. Post, PE, PLS
(919) 818-7862
philip.n.post@gmail.com
PO Box 4912
Chapel Hill, NC 27515

PHILIP POST ENGINEERING
FIRM: C-347

CONCEPT PLAN AND REZONING

PEACH APARTMENTS

107 & 107-A/B JOHNSON STREET - PIN: 9788-03-2946, 9788-03-0899 & 9788-03-0940
CHAPEL HILL, NORTH CAROLINA

EROSION CONTROL PLAN

PROJECT NO.
PEACH

DRAWING NAME:
PEACH_EC.dwg

SHEET NO.
C-7

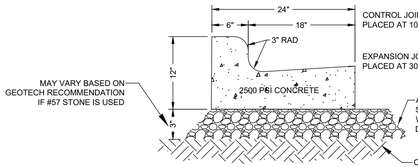

24" STANDARD CURB & GUTTER (ON SITE)

NTS

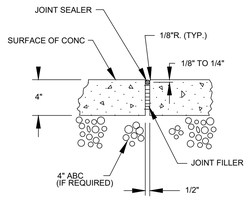

NOTES:

- A GROOVE JOINT 1" DEEP W/ 1/8" RADIUS SHALL BE REQUIRED IN THE CONC. SIDEWALK AT 5' INTERVALS. ONE 1/2" EXPANSION JOINT WILL BE REQUIRED AT 50' INTERVALS. A 1/2" EXPANSION JOINT WILL BE REQUIRED WHERE THE SIDEWALK JOINS ANY RIGID STRUCTURE.
- FINISHED SURFACE OF SIDEWALK TO BE BROOM FINISHED, PERPENDICULAR TO TRAFFIC FLOW.

SIDEWALK DETAIL

NTS

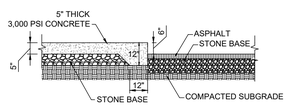

TURNDOWN SIDEWALK DETAIL

NTS

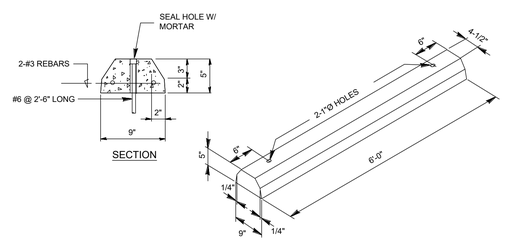

PRECAST CONCRETE WHEELSTOP

NTS

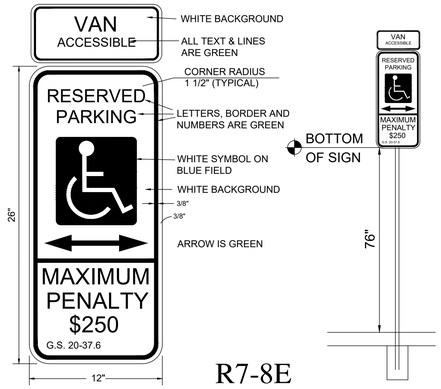

R7-8E

ACCESSIBLE PARKING SIGN

NTS

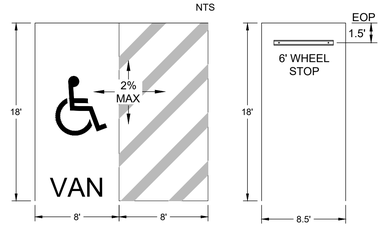

HANDICAP VAN ACCESSIBLE

REGULAR SPACE (WHEEL STOP ONLY WHERE INDICATED)

PARKING SPACES - TYPICAL

NTS

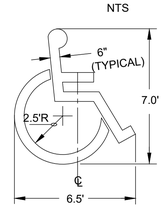

LOCATE AT EDGE OF PARKING SPACE UNLESS ACCOMPANIED BY "VAN" LETTERING

ACCESSIBLE PARKING SYMBOL

NTS

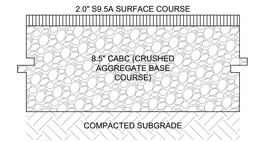

LIGHT DUTY PAVEMENT

NOTE: PAVEMENT SECTIONS SHALL MATCH ANY RECOMMENDATIONS BY GEOTECH ENGINEERS IF PROVIDED.

ASPHALT PAVING

NTS

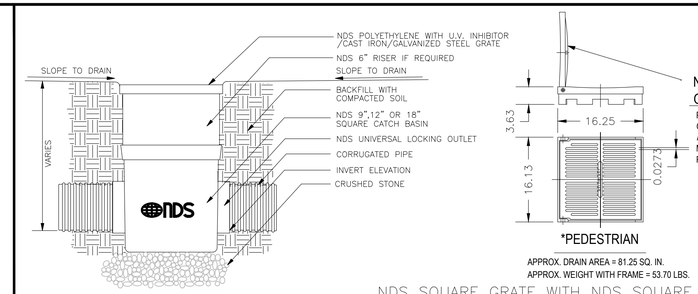

NDS SQUARE GRATE WITH NDS SQUARE AREA DRAIN

NOT TO SCALE (LANDSCAPE APPLICATION)

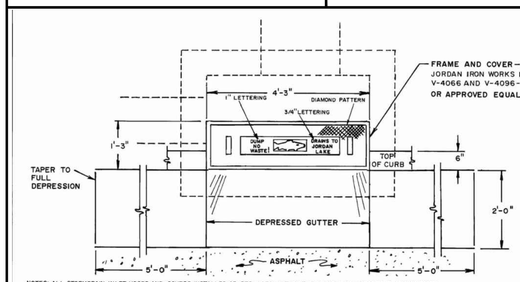

NOTES: ALL STORMDRAIN INLET HOODS AND COVERS INSTALLED OR REPLACED WITHIN THE CHAPEL HILL PLANNING JURISDICTION AFTER JULY 3, 2000 SHALL BE PRE-CAST WITH THE MESSAGE "DUMP NO WASTE | DRAINS TO JORDAN LAKE" (INCLUDING THE CAST IMAGE OF A FISH).
PRE-CAST HOODS AND COVERS SHALL BE DESIGNED IN ACCORDANCE WITH EAST JORDAN IRON WORKS DETAILS V-4066 AND V-4096-1, OR EQUAL, AND MUST COMPLY WITH APPLICABLE STATE AND TOWN REQUIREMENTS FOR MATERIALS AND INSTALLATION.
THIS DETAIL SUPERCEDES STORM DRAIN (SD-5C) DETAIL AS OF JULY 31, 2000.

NO SCALE

ENGINEERING STANDARD DEPARTMENT DETAILS

TITLE	REVISIONS			DET.NO.
CURB INLET – TOP VIEW	NO	DATE	BY	SD-5A

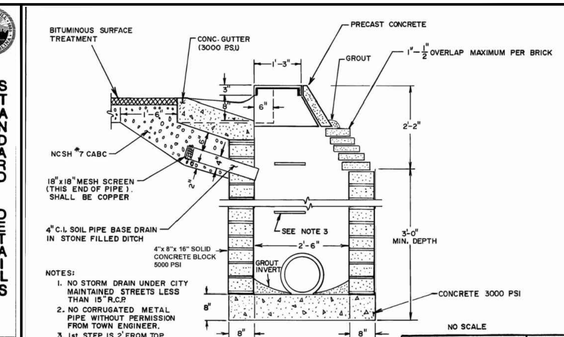

NOTES:
1. NO STORM DRAIN UNDER CITY MAINTAINED STREETS LESS THAN 15" R.C.P.
2. NO CORRUGATED METAL PIPE WITHOUT PERMISSION FROM TOWN ENGINEER.
3. 1st STEP IS 2' FROM TOP.

NO SCALE

ENGINEERING STANDARD DEPARTMENT DETAILS

TITLE	REVISIONS			DET.NO.
CURB INLET – SIDE VIEW	NO	DATE	BY	SD-5

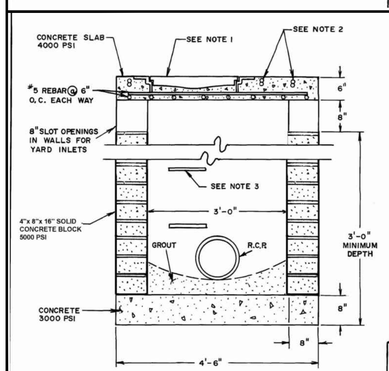

NOTES:
1. EAST JORDAN IRON WORKS FLUSH MOUNT MANHOLE & MH RING. SEE STD. DETAIL SD-4C.
2. #5 REBAR PLACED DIAGONALLY AROUND MANHOLE RING. SEE STD. DET. SD-2.
3. MANHOLE STEPS @ 15" O.C. 1st STEP IS 2'-0" FROM TOP.
4. THIS DETAIL MAY BE USED AS AN ALTERNATE FOR JUNCTION BOXES IN SIDEWALK OR YARD AREAS ONLY.

SECTION A-A'

NO SCALE

ENGINEERING STANDARD DEPARTMENT DETAILS

TITLE	REVISIONS			DET.NO.
YARD INLET-	NO	DATE	BY	SD-2A

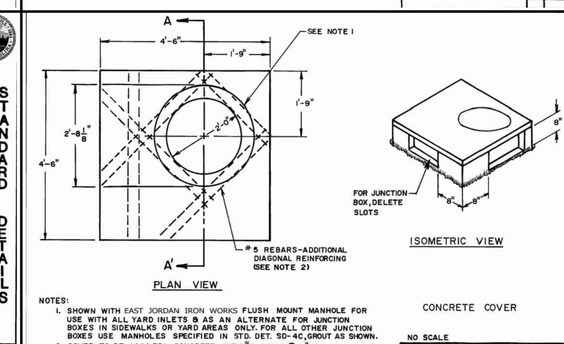

NOTES:
1. SHOWN WITH EAST JORDAN IRON WORKS FLUSH MOUNT MANHOLE FOR USE WITH ALL YARD INLETS & AS AN ALTERNATE FOR JUNCTION BOXES IN SIDEWALKS OR YARD AREAS ONLY. FOR ALL OTHER JUNCTION BOXES USE MANHOLES SPECIFIED IN STD. DET. SD-4C, GROUT AS SHOWN.
2. COVER TO BE 4000 PSI CONCRETE WITH #5 REBAR @ 6" O.C. EACH WAY.
3. SEE STANDARD DETAIL SD-2A FOR SECTION A-A'.

NO SCALE

ENGINEERING STANDARD DEPARTMENT DETAILS

TITLE	REVISIONS			DET.NO.
YARD INLET/ JUNCTION BOX	NO	DATE	BY	SD-2

SH 1 of 2

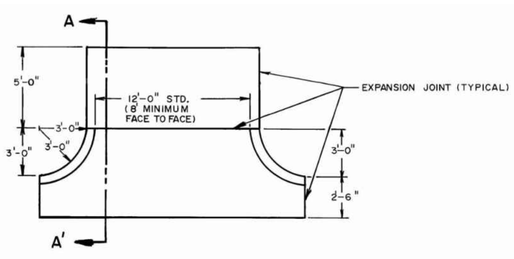

TYPICAL DRIVEWAY APRON

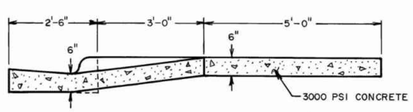

DRIVEWAY SECTION A-A'

NO SCALE

ENGINEERING STANDARD DEPARTMENT DETAILS

TITLE	REVISIONS			DET.NO.
DRIVEWAY RAMP- CURB & GUTTER SECTION (ALT)	NO	DATE	BY	D-7

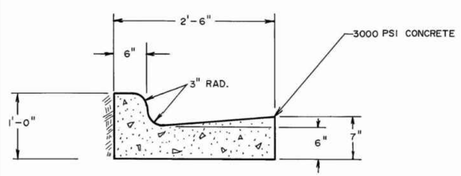

SCALE: 1"=1'-0"

ENGINEERING STANDARD DEPARTMENT DETAILS

TITLE	REVISIONS			DET.NO.
CURB & GUTTER SECTION	NO	DATE	BY	ST-2

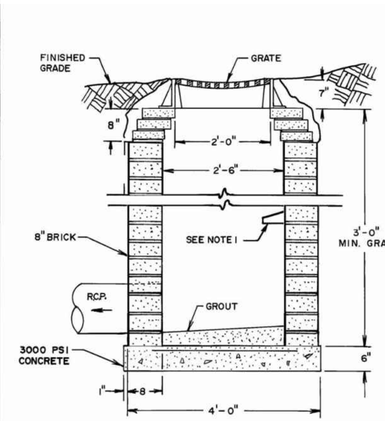

SIDE VIEW

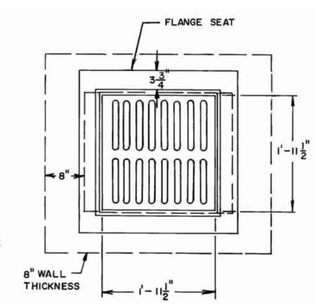

TOP VIEW

NOTE:
1. STEPS ON CENTER. 1st STEP IS 2' FROM TOP.

NO SCALE

ENGINEERING STANDARD DEPARTMENT DETAILS

TITLE	REVISIONS			DET.NO
CATCH BASIN- TOP VIEW & SIDE VIEW	NO	DATE	BY	SD-6

	DATE	BY
7		
6		
5		
4		
3		
2		
1		

REVISIONS

PROJECT ENGINEER: PNP
CHECKED BY: PNP
DRAWN BY: DC
FIRST ISSUE DATE: 12-28-2020

Philip Post Engineering, Inc. 2020. This drawing is the property of Philip Post Engineering, Inc. and is not to be used for any purpose, in whole or in part. It is only to be used for the project and for the purpose for which it was issued, and is not to be used on any other project or site. It is to be returned upon the written request of Philip Post Engineering, Inc.COPYRIGHT 2020

Philip N. Post, PE, PLS
(919) 818-7862
philip.n.post@gmail.com
PO Box 4912
Chapel Hill, NC 27515
PHILIP POST ENGINEERING
FIRM: C-347

CONCEPT PLAN AND REZONING
PEACH APARTMENTS
107 & 107-A/B JOHNSON STREET - PIN: 9788-03-2946, 9788-03-0899 & 9788-03-0940
CHAPEL HILL, NORTH CAROLINA

SITE DETAILS

PROJECT NO. PEACH
DRAWING NAME: PEACH_D.dwg
SHEET NO. D-1

sitescapes
P.O. Box 22326
Lincoln, NE 68542
PF: 402/421-9464
FX: 402/421-9479
WEBSITE: www.sitescapesonline.com
E-MAIL: info@sitescapesonline.com

TITLE	PRODUCT NO.	INCH TOLERANCES U.O.S.	
APEX BIKE RACK	*AP2-02-SM*	FRACTION--±1/16" ANG----------±1°	THE INFORMATION CONTAINED IN THIS DRAWING IS THE SOLE PROPERTY OF SITESCAPES, INC. ANY REPRODUCTION IN PART OR AS A WHOLE WITHOUT THE WRITTEN PERMISSION OF SITESCAPES, INC. IS PROHIBITED.

*Available in powder coat and DuraCoat finishes

MATERIALS LIST
(1) Tubing - Ø 2 3/8" x .154" Wall Steel Tubing
(2) Surface Plate - Ø 7 1/2" x 1/4" Thick Steel Plate with Three Ø 9/16" Mounting Holes
(3) Mounted with Six Ø 1/2" x 4-5" Stainless Steel Anchor Bolts (Customer Supplied)

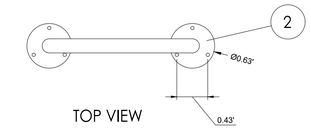

TOP VIEW

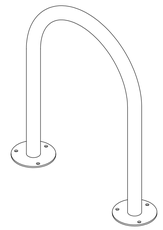

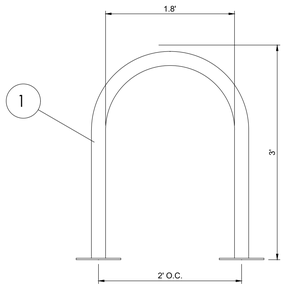

FRONT VIEW

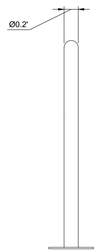

RIGHT SIDE VIEW

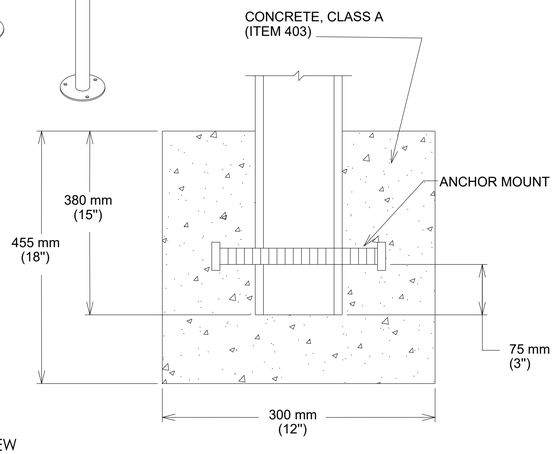

7		
6		
5		
4		
3		
2	–	–
1	–	–
	REVISIONS	DATE / BY

PROJECT ENGINEER
PNP

CHECKED BY
PNP

DRAWN BY
DC

FIRST ISSUE DATE
12-28-2020

Philip Post Engineering, Inc. 2020 This drawing is the property of Philip Post Engineering, Inc. and is not to be reproduced or copied in whole or in part. It is only to be used for the project and for the dates and purposes stated herein and is not to be used on any other project or site. It is to be returned upon the written request of Philip Post Engineering, Inc.COPYRIGHT 2020

PHILIP POST ENGINEERING
FIRM: C-347
Philip N. Post, PE, PLS
(919) 818-7862
philip.n.post@gmail.com
PO Box 4912
Chapel Hill, NC 27515

CONCEPT PLAN AND REZONING
PEACH APARTMENTS
107 & 107-A/B JOHNSON STREET - PIN: 9788-03-2946, 9788-03-0899 & 9788-03-0940
CHAPEL HILL, NORTH CAROLINA

SITE DETAILS

PROJECT NO.
PEACH

DRAWING NAME:
PEACH_D.dwg

SHEET NO.
D-2

JOHNSON STREET

40.0' PUBLIC R/W

TBM ELEVATION AT TOP OF NAIL: 100.0' (**ASSUMED**)

BACK OF CURB

SANITARY SEWER LINE

SSMH RIM ELEV: 99.07' INV IN: 92.12' INV OUT: 92.34'

SSMH RIM ELEV: 107.39' INV IN: 102.54' INV OUT: 102.45'

CATCH BASIN

ROAD SIGN

N 85°30'58" W 48.48'

TIE: IPS TO CALC. PT.

15" RCP

OUTLET INV: 94.3

S 85°30'58" E 48.48'

S 84°35'00" E 100.12'

LOTS 62-63
7,112 SQ. FT.
(EXCLUDING OVERLAP AREA)

LOTS 60-61
7,116 SQ. FT.
(EXCLUDING OVERLAP AREA)

LOTS 1 & 2
15,030 SQ. FT.

15' TYPE 'B' BUFFER

PROPOSED 6' x 10' SHELTER WITH BENCH ON CONC. PAD

PROPOSED SIDEWALK TO CURB

2 STEPS

24' CURB & GUTTER

CONC. STANDING CURB

2" GREENTOP OVERFLOW PARKING SPACES

NO CURB

VAN

PROPOSED 4' x 12' FENCED CORRAL FOR FOUR ROLL CARTS (TWO REFUSE / TWO RECYCLE)

RAMP (TYP.)

PROPOSED UNIT

RETAINING WALL

CONCRETE DRIVE

ROOF LINE

PROPOSED 20' x 30' FENCED PLAYGROUND

PROPOSED 12' DIA. COVERED GAZEBO

PROPOSED STEPPING STONE PATH

RAIN GARDEN

PROPOSED 15' x 20' RAISED BED COMMUNITY GARDEN

N 07°36'28" E 164.26'

TIE: EIP TO CALC. PT.

LOTS 64-65
COLE HEIGHTS EXTENSION
P.B. 33-59

MELVINA HARRIS
D.B. 337-216

LOTS 54-55
COLE HEIGHTS EXTENSION
P.B. 33-59

ARTHUR ROBERT
LISA DURSTIN
D.B. 6574-505

N 86°12'26" E 153.65' TOTAL

148.79' IPS TO IPS

CHAIN LINK FENCE

S 07°38'42" W 149.75'

WOOD FENCE

N 85°22'36" W 47.13'

47.12'
N 85°22'36" W

N 85°10'06" W 100.11'

4.81'

4.32'

3.83'

N 85°58'39" W 47.11'

N 85°58'39" W 47.11'

S 85°58'39" E 103.61'
TIE: EIP TO EIP

S 86°14'58" E
TIE: 22.64'

S 84°57'59" E
TIE: 23.24'

N 86°11'39" W 50.01'
TIE: EIP TO EIR

POSSIBLE TITLE OVERLAP 215 SQ. FT.

POSSIBLE TITLE OVERLAP 192 SQ. FT.

15" RCP

PER P.B. 111-49

CONCRETE BASKETBALL COURT

CHAPEL HILL - CARRBORO CITY SCHOOLS CENTRAL ADMINISTRATION BUILDING
P.B. 54-99

CHAPEL HILL BOARD OF EDUCATION
D.B. 837-129

GRAPHIC SCALE
5 0 2.5 5 10 20
(IN FEET)
1 inch = 10 ft.

Know what's **below.**
Call before you dig.

7			
6			
5			
4			
3			
2			
1		-	-
	REVISIONS	DATE	BY

PROJECT ENGINEER
PNP

CHECKED BY
PNP

DRAWN BY
DC

FIRST ISSUE DATE
12-28-2020

Philip Post Engineering, Inc. 2020. This drawing is the property of Philip Post Engineering, Inc. and is not to be reproduced, in whole or in part. It is only to be used for the project and for the date specified. Provided herein and is not to be used on any other project or site. It is to be returned upon the written request of Philip Post Engineering, Inc.COPYRIGHT 2020

Philip N. Post, PE, PLS

(919) 818-7862
philip.n.post@gmail.com

PO Box 4912
Chapel Hill, NC 27515

PHILIP POST ENGINEERING
FIRM: C-347

CONCEPT PLAN AND REZONING

PEACH APARTMENTS

107 & 107-A/B ,JOHNSON STREET - PIN: 9788-03-2946, 9788-03-0899 & 9788-03-0940
CHAPEL HILL, NORTH CAROLINA

SITE PLAN SKETCH

PROJECT NO.
PEACH

DRAWING NAME:
SITE PLAN-COLOR.dwg

SHEET NO.
C